800 V CoolMOS™ P7 a new benchmark in efficiency and thermal performance

Dr. Li Fanghua (Product Marketing Manager)
Preimel Stefan (Concept Engineer)
Huntington Jared Justin (Application Engineer)

CoolMOS™ P7 mainly targets flyback based low power SMPS applications

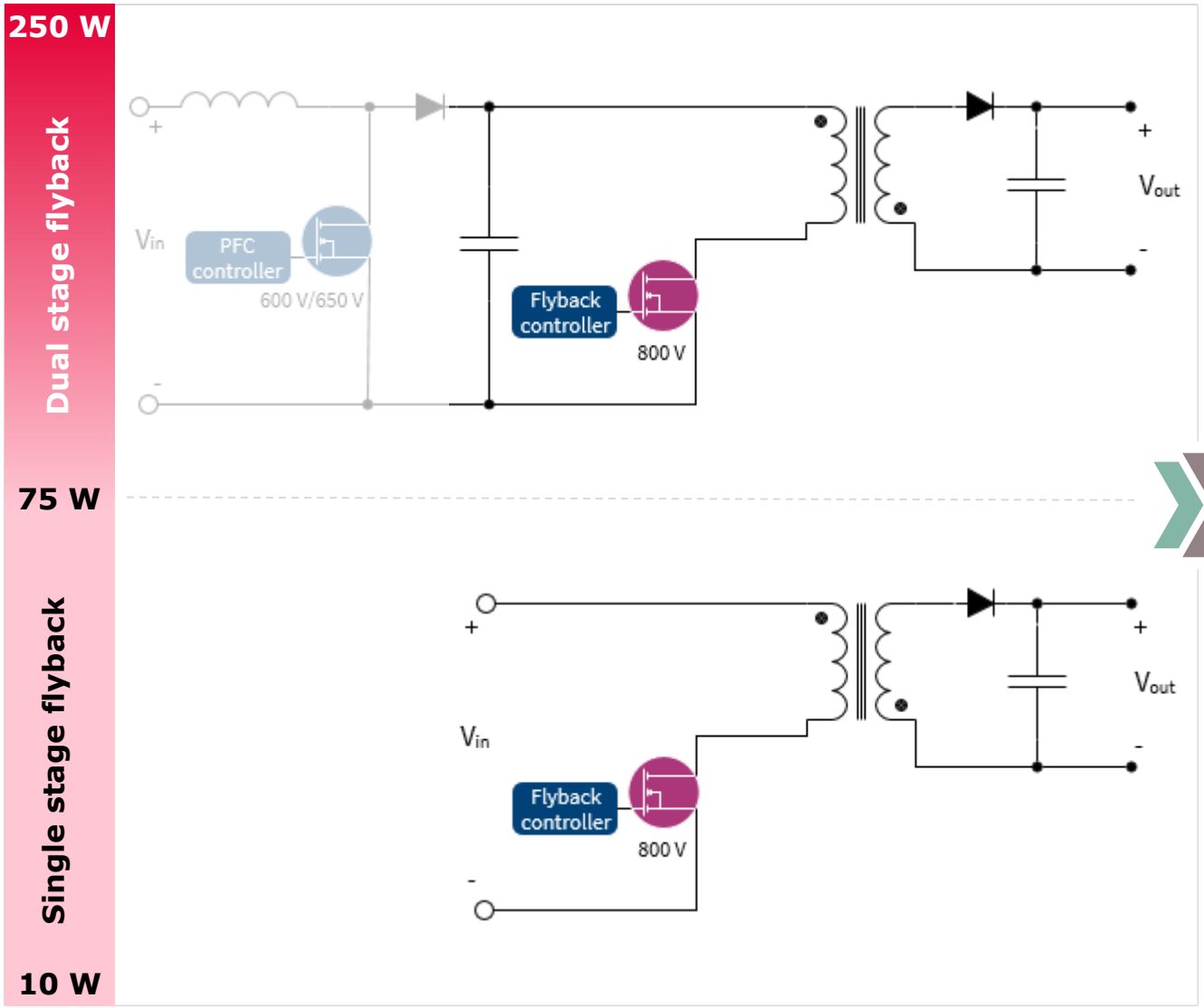

Copyright © Infineon Technologies AG 2017. All rights reserved.

CoolMOS™ P7 delivers >40% optimization in key parameters to power flyback based applications

Parameter	CoolMOS™ C3	Optimization	CoolMOS™ P7
Q_g* [nC]	**64**	**Performance** 1 **>50%**	**24**
E_{oss}* [uJ]	**6.1**		**2.7**
C_{oss}* [pF]	32		14
C_{iss}* [pF]	1583		770
DPAK $R_{DS(on)}$ [Ω]	**0.9** – 2.7		**0.28** – 4.5
$V_{GS(th)}$ deviation [V]	**±0.9**	**Ease-of-use** 2 **>40%**	**±0.5**
Zener Diode	**No**		**Yes**
Portfolio	7 $R_{DS(on)}$		12 $R_{DS(on)}$
Technology	Legacy	**Price** 3 **Improved**	Latest

*corresponds to 450 mΩ device

Copyright © Infineon Technologies AG 2017. All rights reserved.

CoolMOS™ P7 is a perfect fit to power flyback based applications

800 V CoolMOS™ P7 value proposition

1 Best-in-class performance

- 0.1 … 0.6% efficiency gain
- 2 …. 8°C better thermal
- Small form factor enabler

2 State-of-the-art ease-of-use

- Best-in-class quality and reliability
- Up to Class 2 (HBM) ESD ruggedness
- Easy to drive and to design-in
- EMI on par with competition

+

3 Best-in-class price/performance

- Competitive as compared to C3/CE

Compared to CoolMOS™ C3 and competitors

Copyright © Infineon Technologies AG 2017. All rights reserved.

1 CoolMOS™ P7 offers up to 0.4% better efficiency and up to 6°C lower MOSFET temperature

High line

Plug and play in a **80 W LED driver** from market: TO-220FullPAK 360 mΩ equivalent

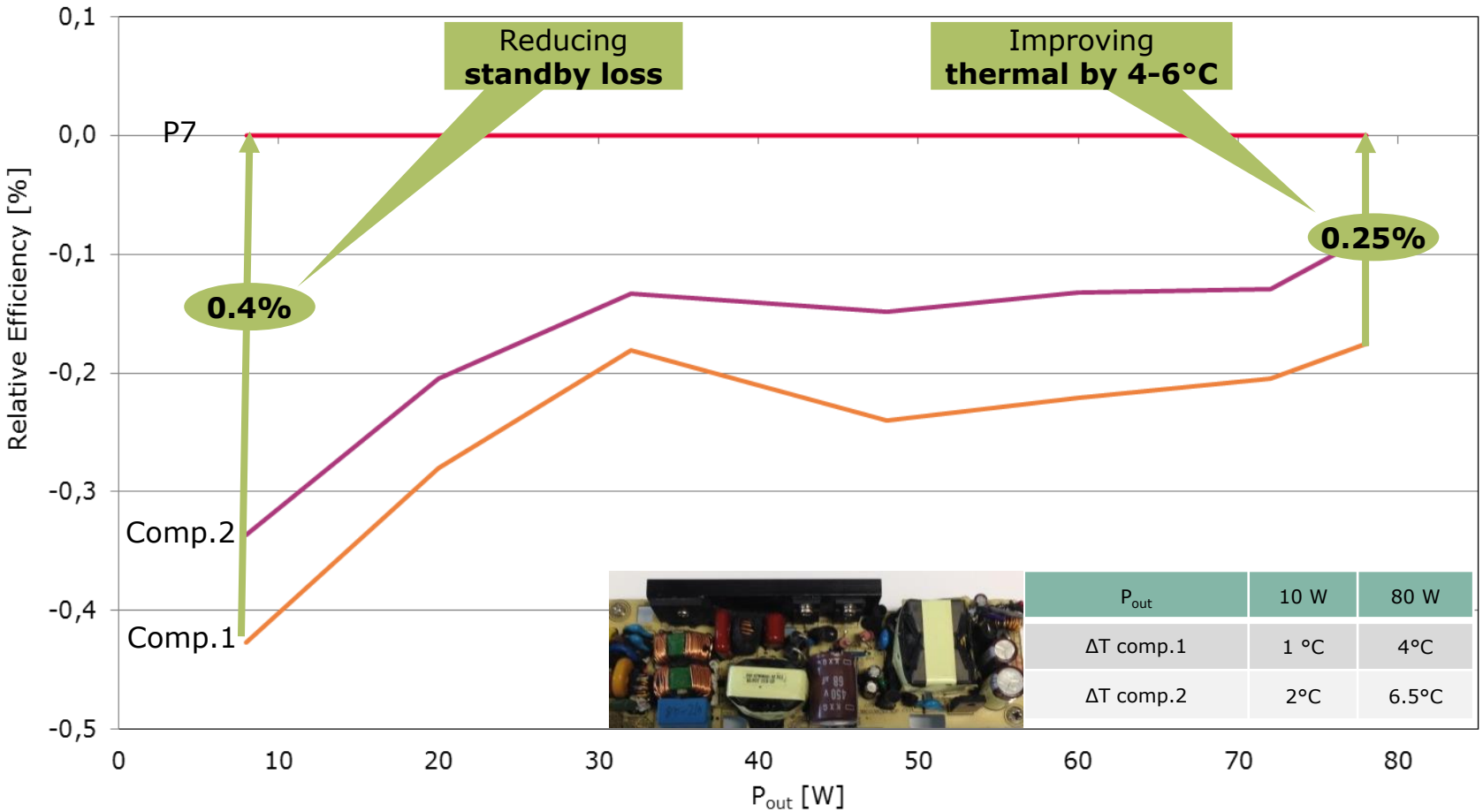

P_{out}	10 W	80 W
ΔT comp.1	1 °C	4°C
ΔT comp.2	2°C	6.5°C

Dual stage flyback V_{out}=24-40 V, I_{out}= 2.1 A

Copyright © Infineon Technologies AG 2017. All rights reserved.

1 CoolMOS™ P7 offers up to 4.5% better efficiency in a 12 W charger

High line

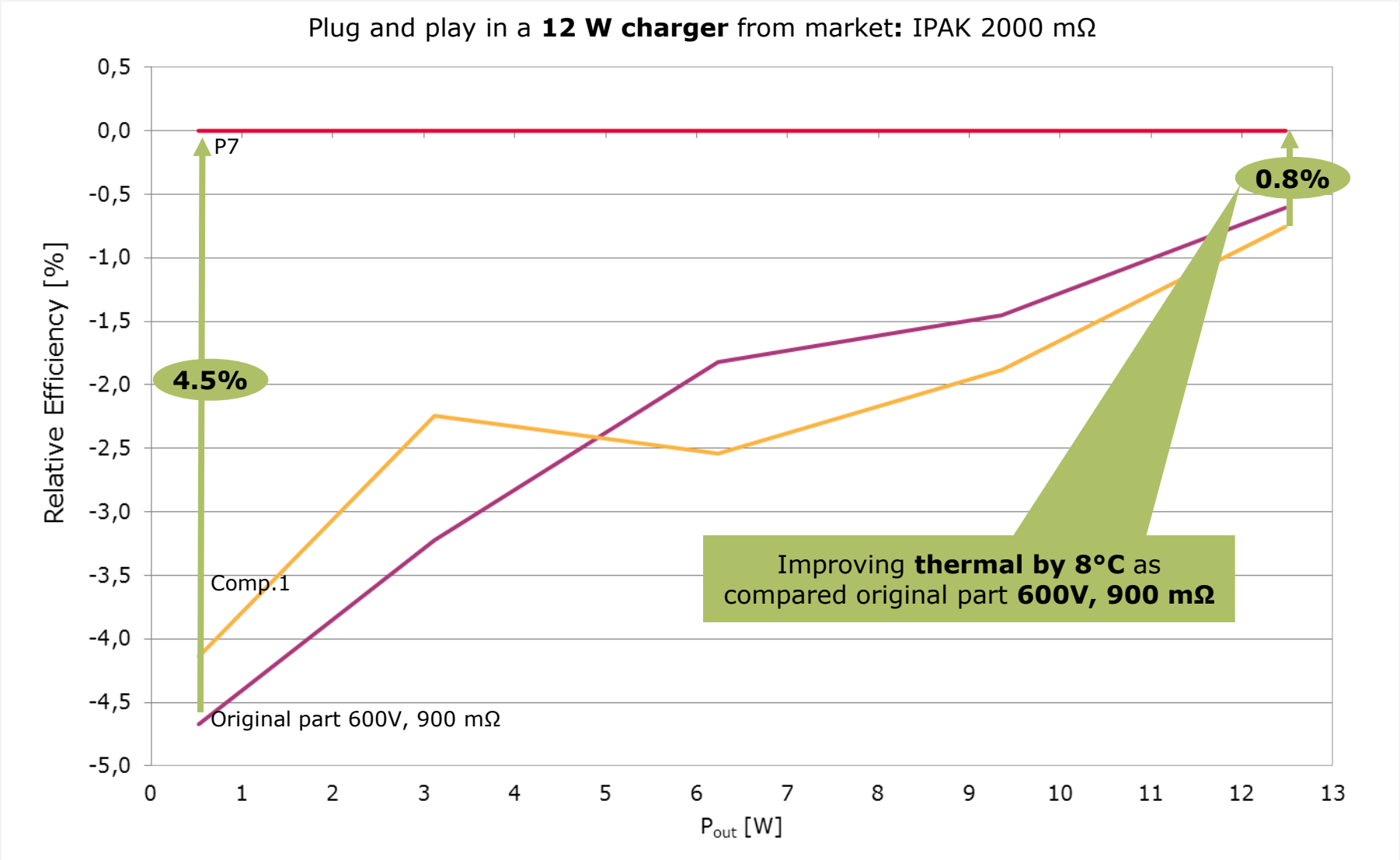

Single stage flyback V_{out}=5,2 V, I_{out}=2,4 A

Copyright © Infineon Technologies AG 2017. All rights reserved.

1 CoolMOS™ P7 offers best-in-class DPAK $R_{DS(on)}$ to enable smaller form factor and cost saving

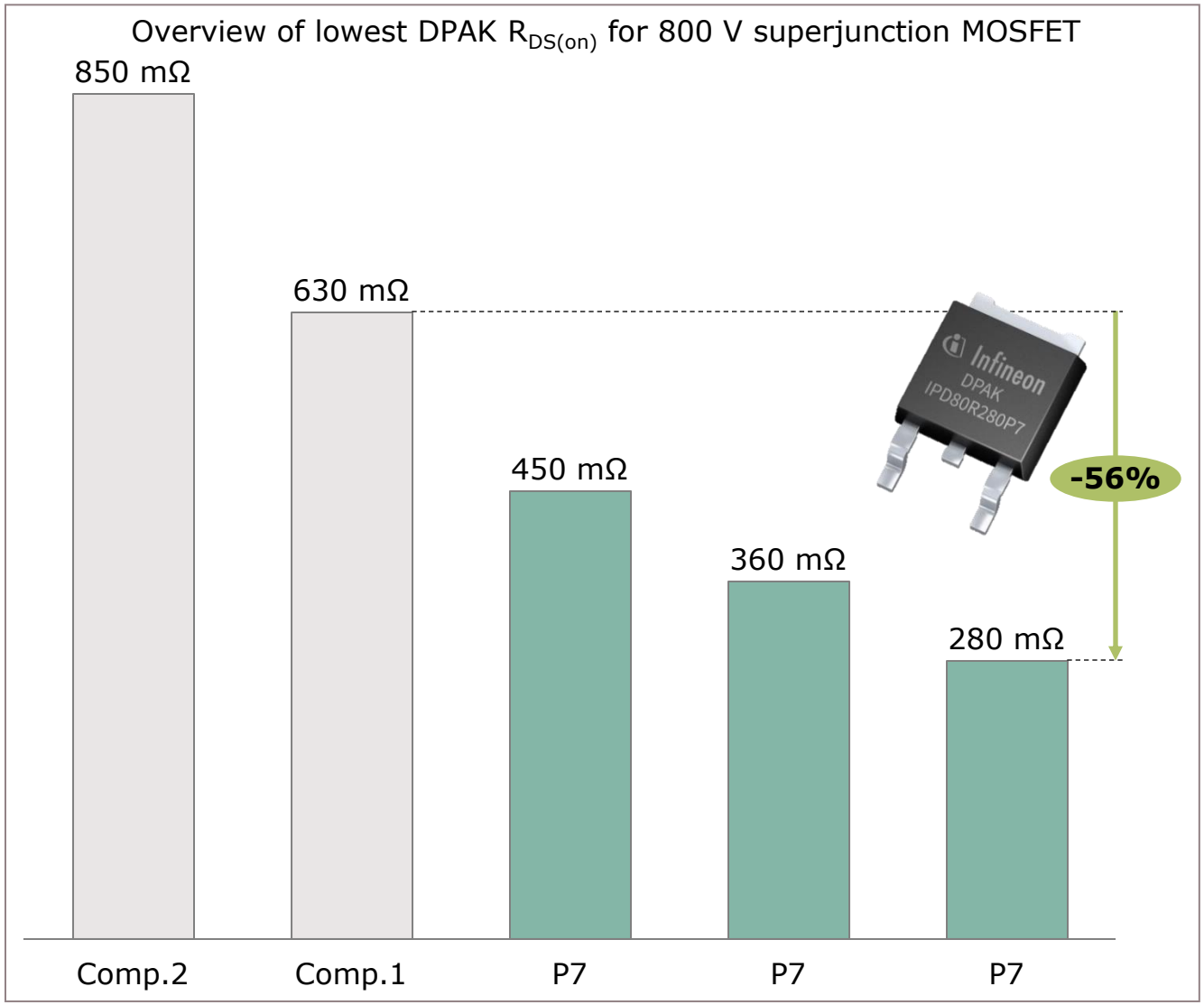

Best-in-class DPAK $R_{DS(on)}$

Customer benefits:

- **High power density**
- **Lower BOM cost**
- **Less production cost**

Copyright © Infineon Technologies AG 2017. All rights reserved.

2 Highest quality and reliability – 38 fails over 1.6 billion shipped parts

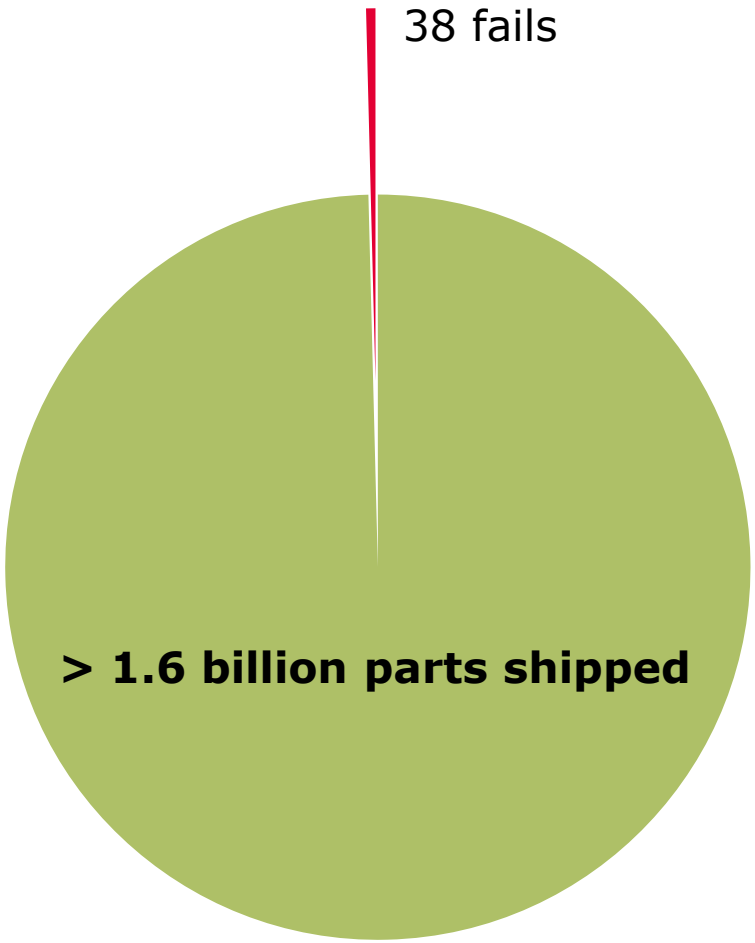

All CoolMOS™ Technologies

- 0.03 DPM on average
- Over 1.6 billion parts shipped only 38 fails

Copyright © Infineon Technologies AG 2017. All rights reserved.

2 CoolMOS™ P7 integrated ESD protection reduces ESD related failures

ESD[a] Protection Mechanism

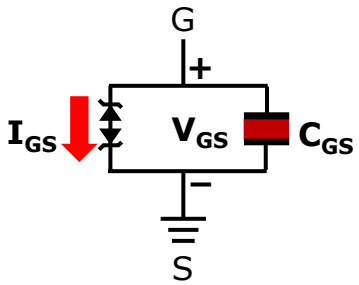

During ESD event:

- V_{GS} is clamped by Zener Diode
- I_{GS} flows through Zener Diode
- Thus protect gate oxide

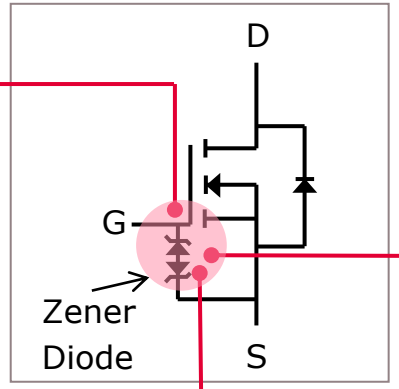

CoolMOS™ P7 ESD Robustness

HBM[b]:

- 2 – 4.5 Ω: Class 1C (1 – 2 kV)
- 0.28 – 1.4 Ω: Class 2 (2 – 4 kV)

CDM[c]:

- Class C3 (≥1 kV)

Customer Benefits

- Better assembling yield thus less cost
- Less field failure rate
- Higher quality and better reputation

[a]ESD: Electro-Static Discharge

[b]HBM: Human Body Model

[c]CDM: Charged Device Model

Copyright © Infineon Technologies AG 2017. All rights reserved.

2 CoolMOS™ P7 offers lowest $V_{GS(th)}$ and smallest $V_{GS(th)}$ deviation

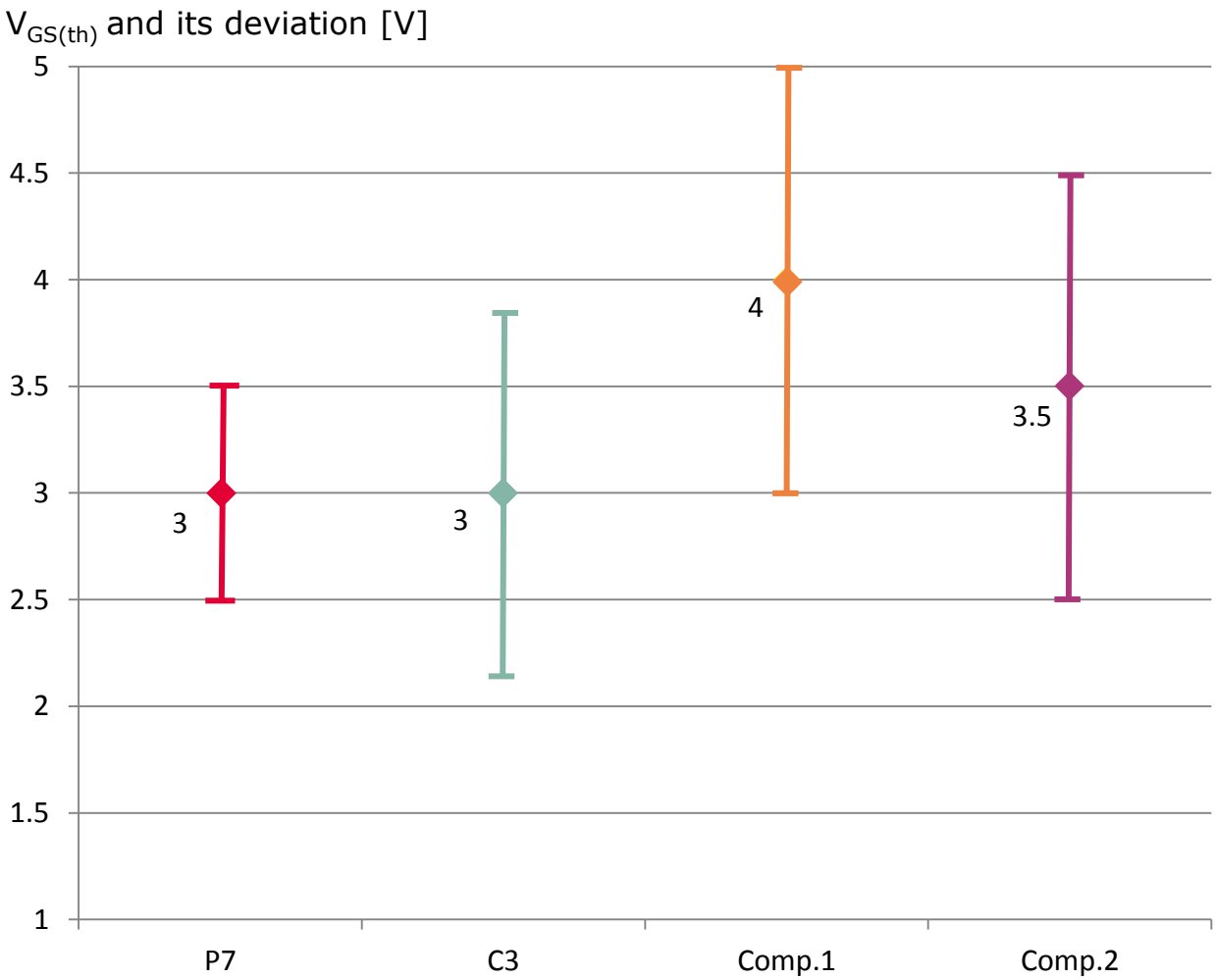

Customer benefits

Easy to drive

- Avoiding MOSFET linear mode operation
- Allowing lower driving voltage
- Reducing idle loss

Easy to design-in

- Increased design flexibility due to tighter tolerance

Copyright © Infineon Technologies AG 2017. All rights reserved.

2 CoolMOS™ P7 shows similar EMI as compared to market offers tested in a IFX 45 W adapter

Plug and play

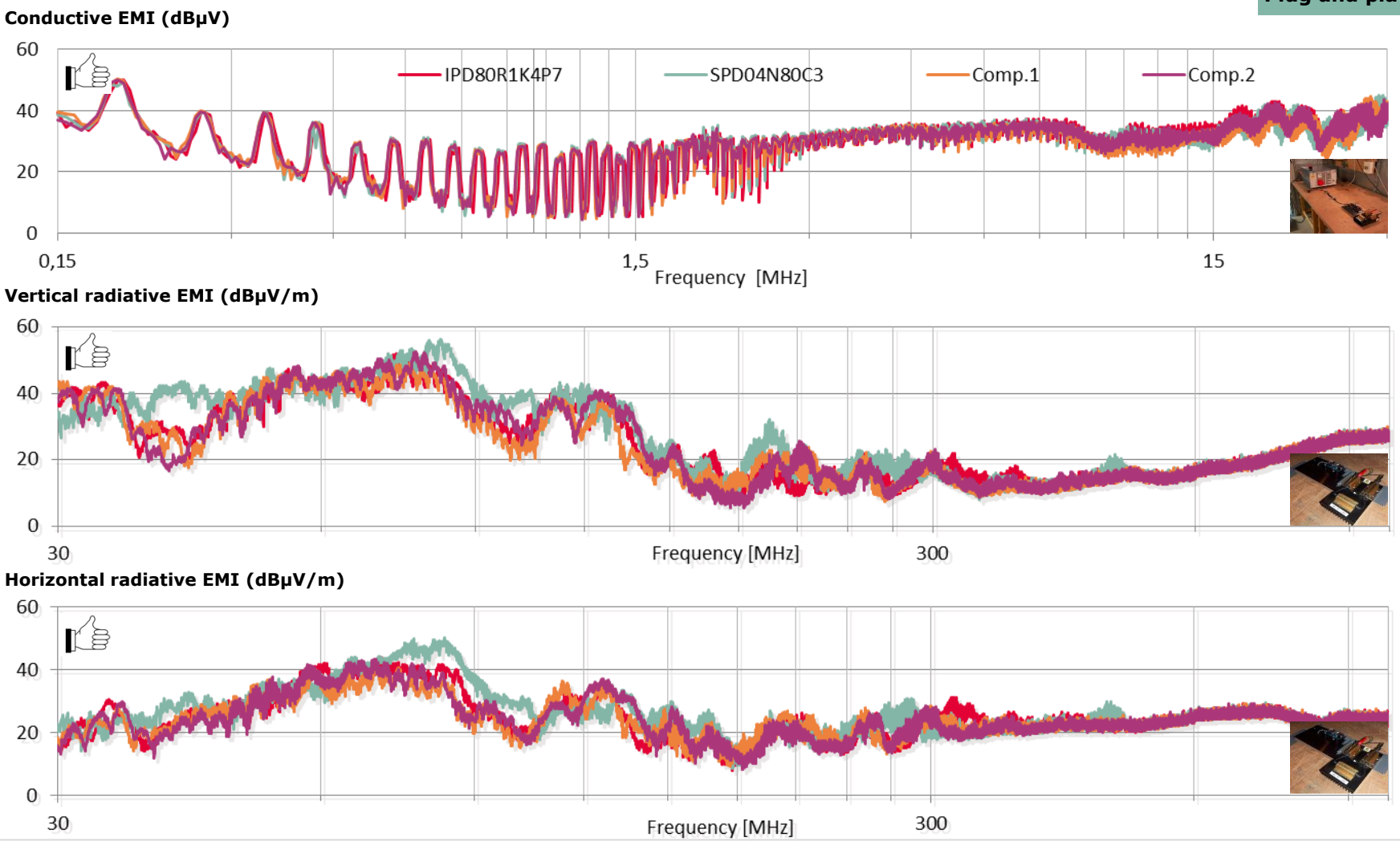

› **EMI is a system level topic and optimization needs to be done on system level**

Copyright © Infineon Technologies AG 2017. All rights reserved.

3 CoolMOS™ P7 combines best-in-class performance with state-of-the-art ease-of-use at best price/performance

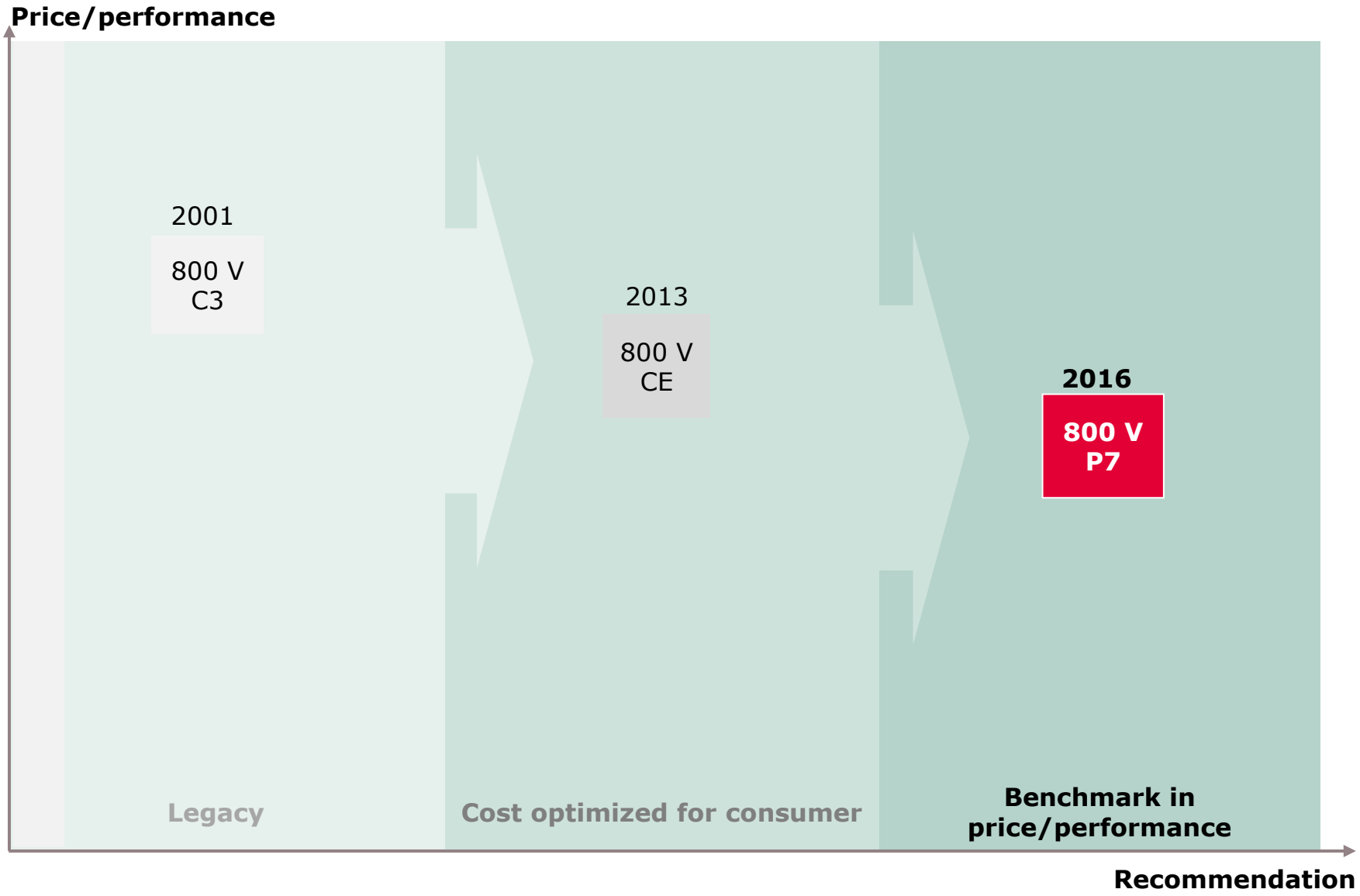

Copyright © Infineon Technologies AG 2017. All rights reserved.

CoolMOS™ P7 offers fully optimized portfolio for target applications

In production | QS in Q2 cy17

800 V SJ MOSFET fully optimized portfolio with 12 different $R_{DS(on)}$s and 7 packages

ESD class	$R_{DS(on)}$ [mΩ]	TO-220 FP	TO-220 FP Narrow Lead	TO-252 DPAK	TO-220	TO-247	TO-251 IPAK LL	TO-251 IPAK SL
1C	4500			IPD80R4K5P7			IPU80R4K5P7	
	3300			IPD80R3K3P7			IPU80R3K3P7	
	2400			IPD80R2K4P7			IPU80R2K4P7	IPS80R2K4P7
	2000			IPD80R2K0P7			IPU80R2K0P7	IPS80R2K0P7
2	1400	IPA80R1K4P7		IPD80R1K4P7	IPP80R1K4P7		IPU80R1K4P7	IPS80R1K4P7
	1200	IPA80R1K2P7		IPD80R1K2P7	IPP80R1K2P7		IPU80R1K2P7	IPS80R1K2P7
	900	IPA80R900P7		IPD80R900P7	IPP80R900P7		IPU80R900P7	IPS80R900P7
	750	IPA80R750P7		IPD80R750P7	IPP80R750P7		IPU80R750P7	IPS80R750P7
	600	IPA80R600P7	IPAN80R600P7	IPD80R600P7	IPP80R600P7		IPU80R600P7	IPS80R600P7
	450	IPA80R450P7	IPAN80R450P7	IPD80R450P7	IPP80R450P7			
	360	IPA80R360P7	IPAN80R360P7	IPD80R360P7	IPP80R360P7	IPW80R360P7		
	280	IPA80R280P7	IPAN80R280P7	IPD80R280P7	IPP80R280P7	IPW80R280P7		

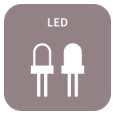

- **Fine $R_{DS(on)}$ granularity**
- **Easy to choose right parts for fine tuning of designs**

Copyright © Infineon Technologies AG 2017. All rights reserved.

Exploring CoolMOS™ P7 advantages with Infineon™ 45 W adapter reference design

High line

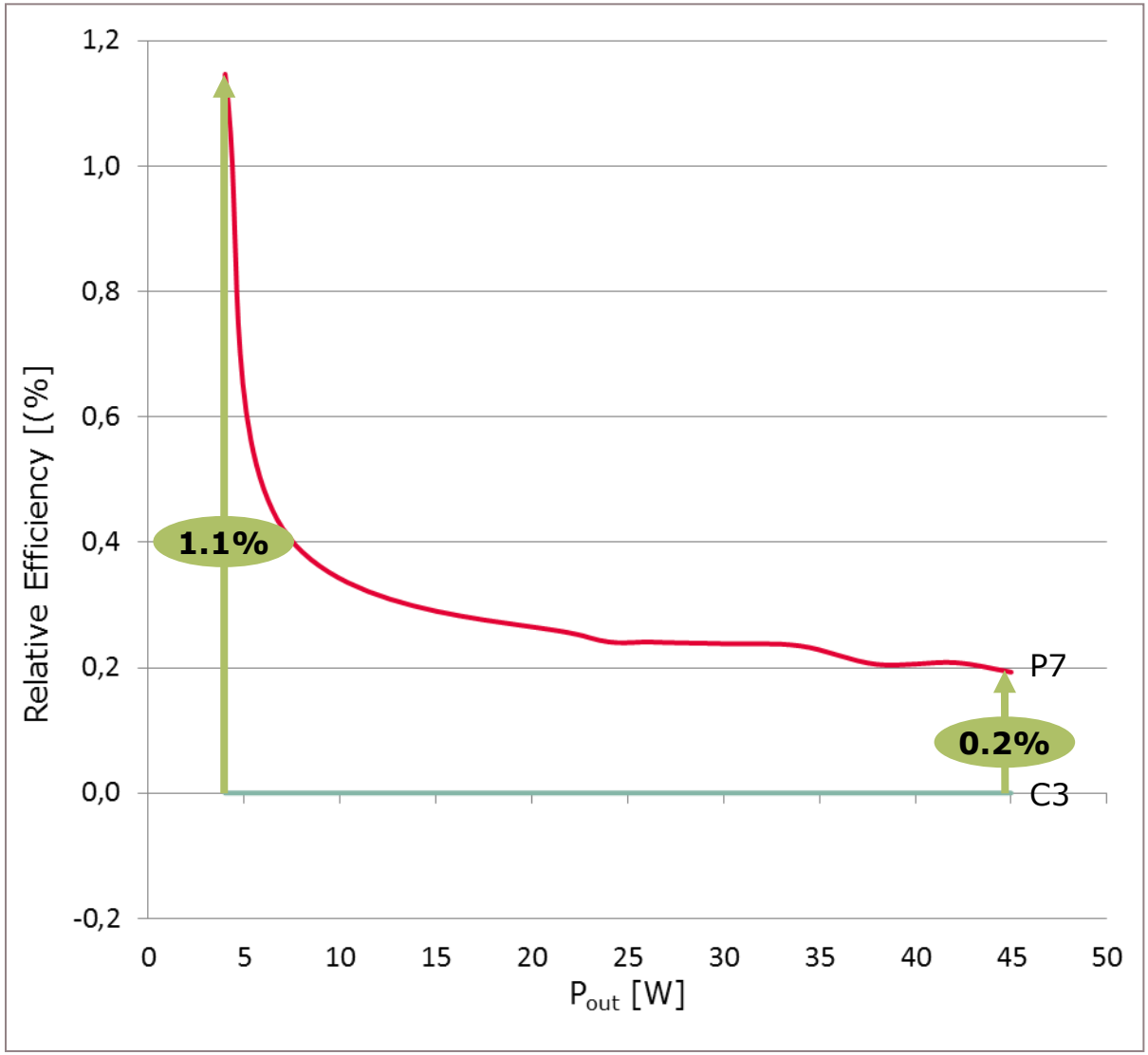

IFX 45 W adapter

10 cm * 3.7 cm * 2.6 cm

Parameter	specification
V_{in} [V_{AC}]	90 – 265
V_{out} [V]	19
I_{out} [A]	2.4
f_{sw} [kHz]	25 - 60
HV MOSFET	IPA80R450P7
Controller	ICE2QS03G

Copyright © Infineon Technologies AG 2017. All rights reserved.

Support
CoolMOS™ P7 800V

Collaterals and Brochures	› Product Briefs › Selection Guides › Application Brochures › Presentations › Press Releases, Ads
Technical Material	› Application Notes › Technical Articles › Simulation Models › Datasheets, MCDS Files › PCB Design Data
Evaluation Boards	› Evaluation Boards › Demoboards › Reference Designs
Videos	› Technical Videos › Product Information Videos

› www.infineon.com/p7

Copyright © Infineon Technologies AG 2017. All rights reserved.

Support
Online tools and services

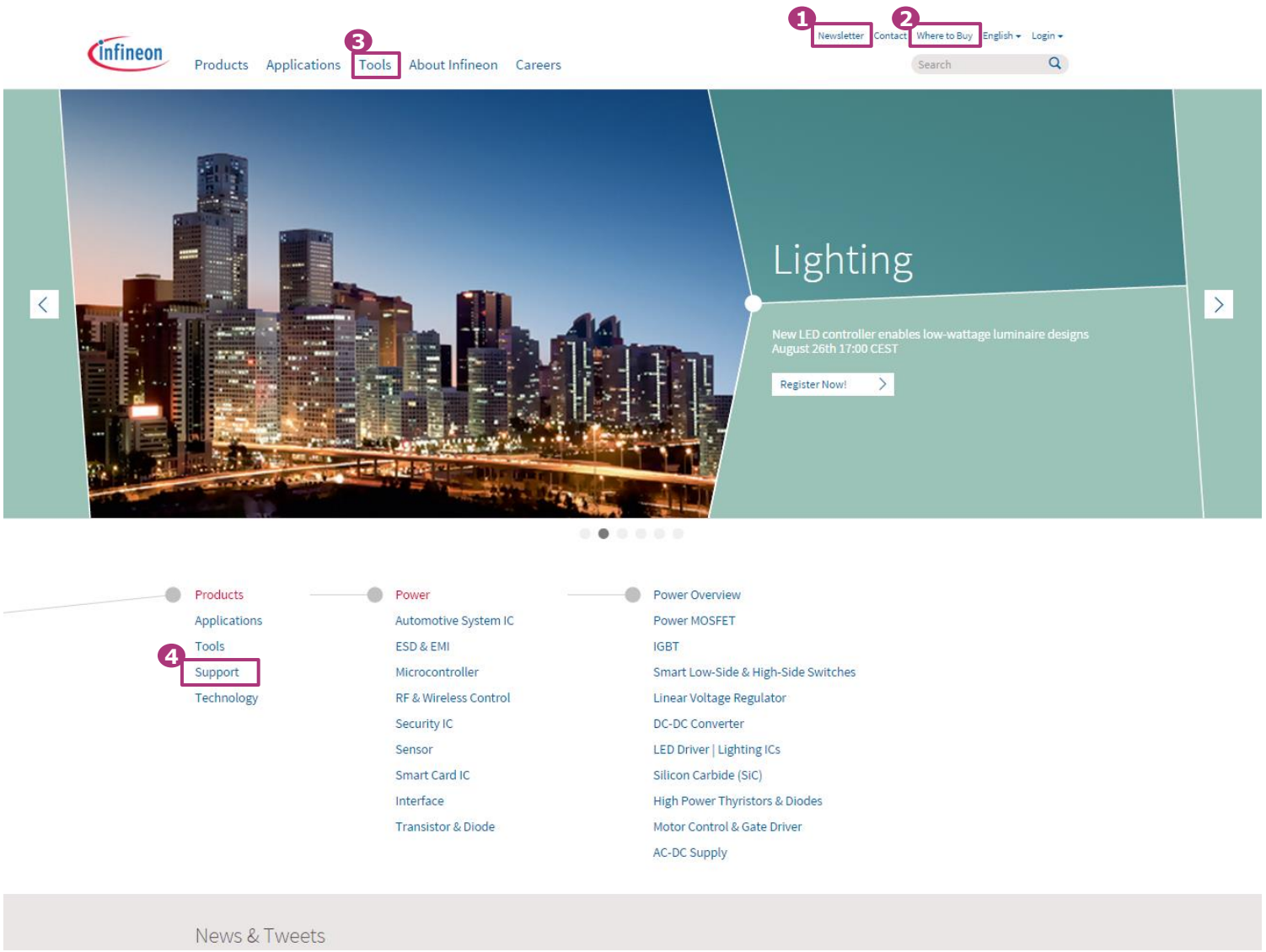

1. **Subscribe to Newsletter**
2. **Where to Buy**
3. **Tools, Finders and Selectors**
4. **Support**

Copyright © Infineon Technologies AG 2017. All rights reserved.

Part of your life. Part of tomorrow.