700 V CoolMOS™ P7

R. Kazianka, R. Mente

August 2017

700 V CoolMOS™ P7 developed to address low power SMPS market for flyback topologies

Suitable for

Flyback topologies and **DCM PFC**

(excluding half or full bridge configurations)

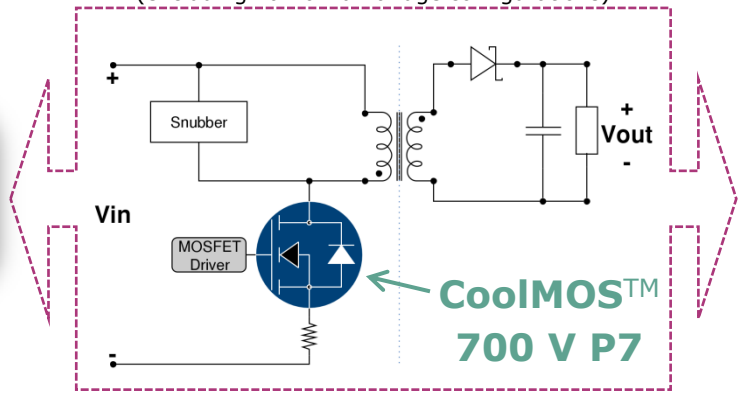

to address

Low power SMPS market

Corner stones of 700 V P7 superjunction MOSFET technology:

- **Cost competitiveness** compared to similar competitor technologies
- Supporting **increased switching frequency** in order to reduce magnetics
- **Best fit** for **target applications** in terms of
  - Thermals and efficiency
  - Ease-of-Use level
  - EMI behavior

Copyright © Infineon Technologies AG 2017. All rights reserved.

700 V CoolMOS™ P7 portfolio incl. Infineon's recommendation for target application

Portfolio 700 V P7 SJ MOSFET

available

next waves starting w/ mid 2017

Standard grade

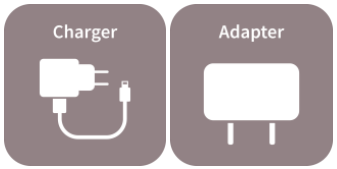

$R_{DS(ON)}$ [Ω]	TO-220 FullPAK	TO-220 FullPAK narrow lead	TO-252 DPAK	TO-251 IPAK SL	TO-251 IPAK SL w/ ISO lead Standoff	SOT-223
2.0 Ω					IPSA70R2K0P7S	IPN70R2K0P7S
1.4 Ω			IPD70R1K4P7S	IPS70R1K4P7S	IPSA70R1K4P7S	IPN70R1K4P7S
1.2 Ω					IPSA70R1K2P7S	IPN70R1K2P7S
0.90 Ω	IPA70R900P7S	IPAN70R900P7S	IPD70R900P7S	IPS70R900P7S	IPSA70R900P7S	IPN70R900P7S
0.75 Ω	IPA70R750P7S	IPAN70R750P7S			IPSA70R750P7S	IPN70R750P7S
0.60 Ω	IPA70R600P7S	IPAN70R600P7S	IPD70R600P7S	IPS70R600P7S	IPSA70R600P7S	IPN70R600P7S
0.45 Ω	IPA70R450P7S	IPAN70R450P7S			IPSA70R450P7S	IPN70R450P7S
0.36 Ω	IPA70R360P7S	IPAN70R360P7S	IPD70R360P7S	IPS70R360P7S	IPSA70R360P7S	IPN70R360P7S

recommended *1

recommended *1

- Large $R_{DS(on)}$ and package variety
- Mainly addressing charger and adapter market
- Also suitable for lighting – audio – AUX power

*1 Infineon's recommendation - different usage may occur based on customer design

Copyright © Infineon Technologies AG 2017. All rights reserved.

700 V CoolMOS™ P7 portfolio developed to address strong growing market segment

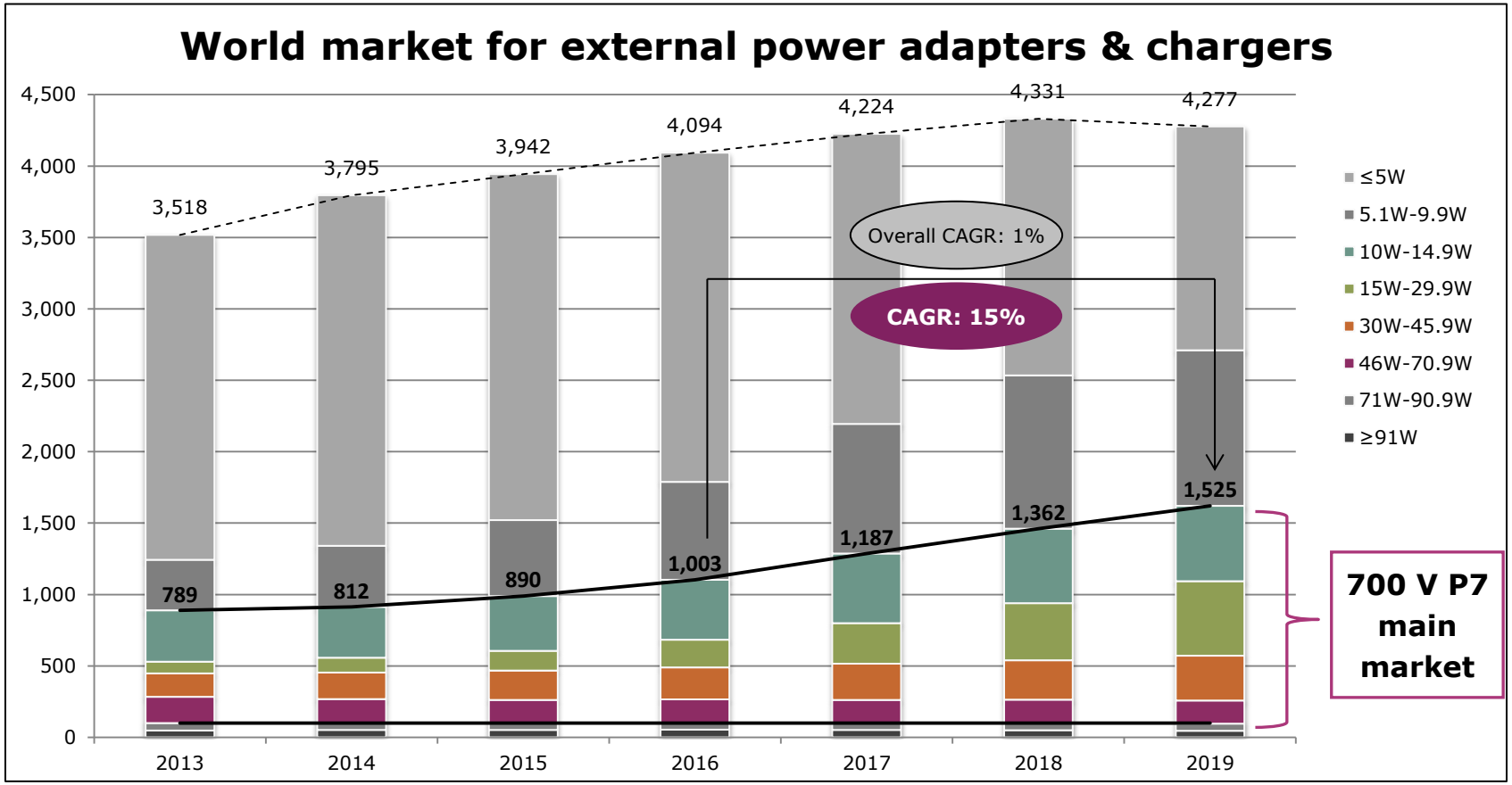

- Overall growth rate (CAGR) for external adapter and chargers of 1% (2016-2019)
- **700 V P7** mainly addressing a **power range** between **10 W to ~70 W**
- **Target market strongly growing** with a CAGR of **15%** to forecasted **1.5 b units** in 2019

Source: IHS - The World Market for External Power Adapters and Chargers by Power Rating, Apr'15

Copyright © Infineon Technologies AG 2017. All rights reserved.

P7 fulfilling future requirements and supporting customers competitiveness

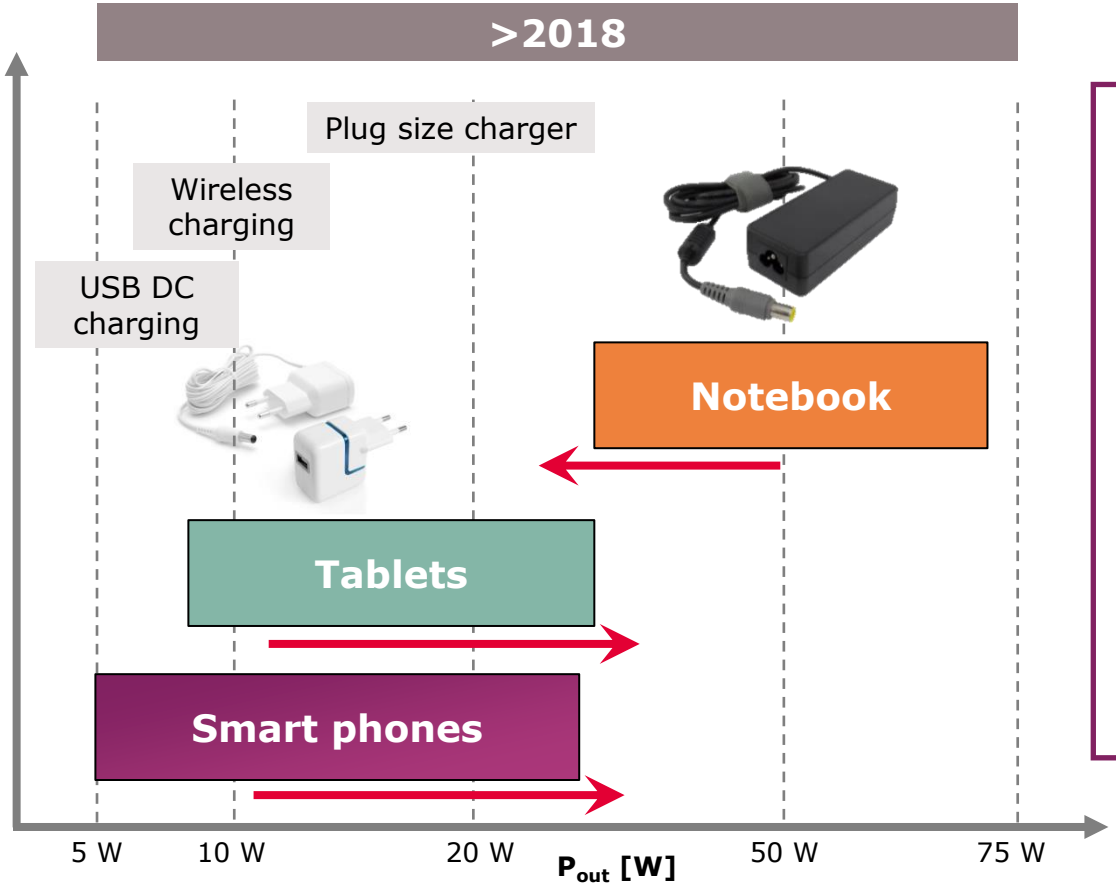

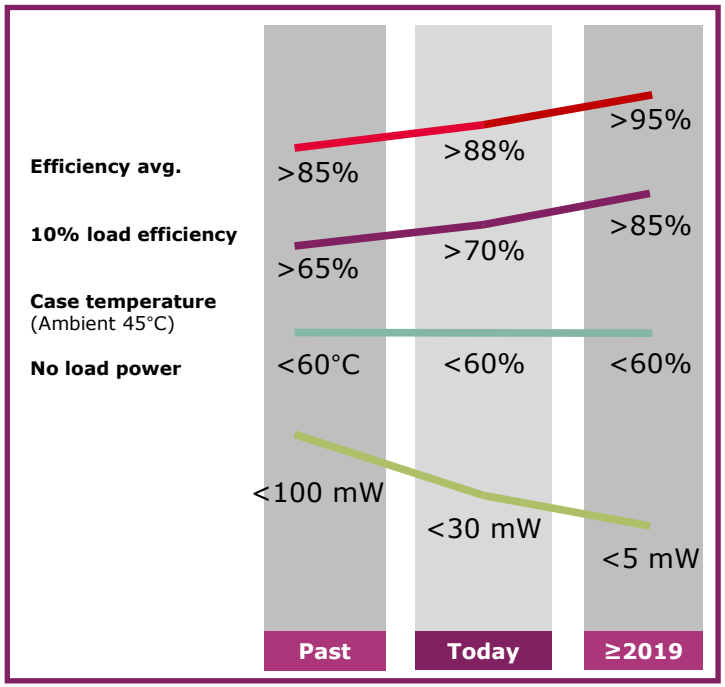

- Trend towards **increased power rating** → up to 25 W with density target of 15 W/in³
- Trend towards **higher efficiency**
- Improved form factor – slim designs – **high density charging**

Data Source: Infineon's internal assumptions

Copyright © Infineon Technologies AG 2017. All rights reserved.

700 V CoolMOS™ P7 with a highly attractive trade off in price vs. performance

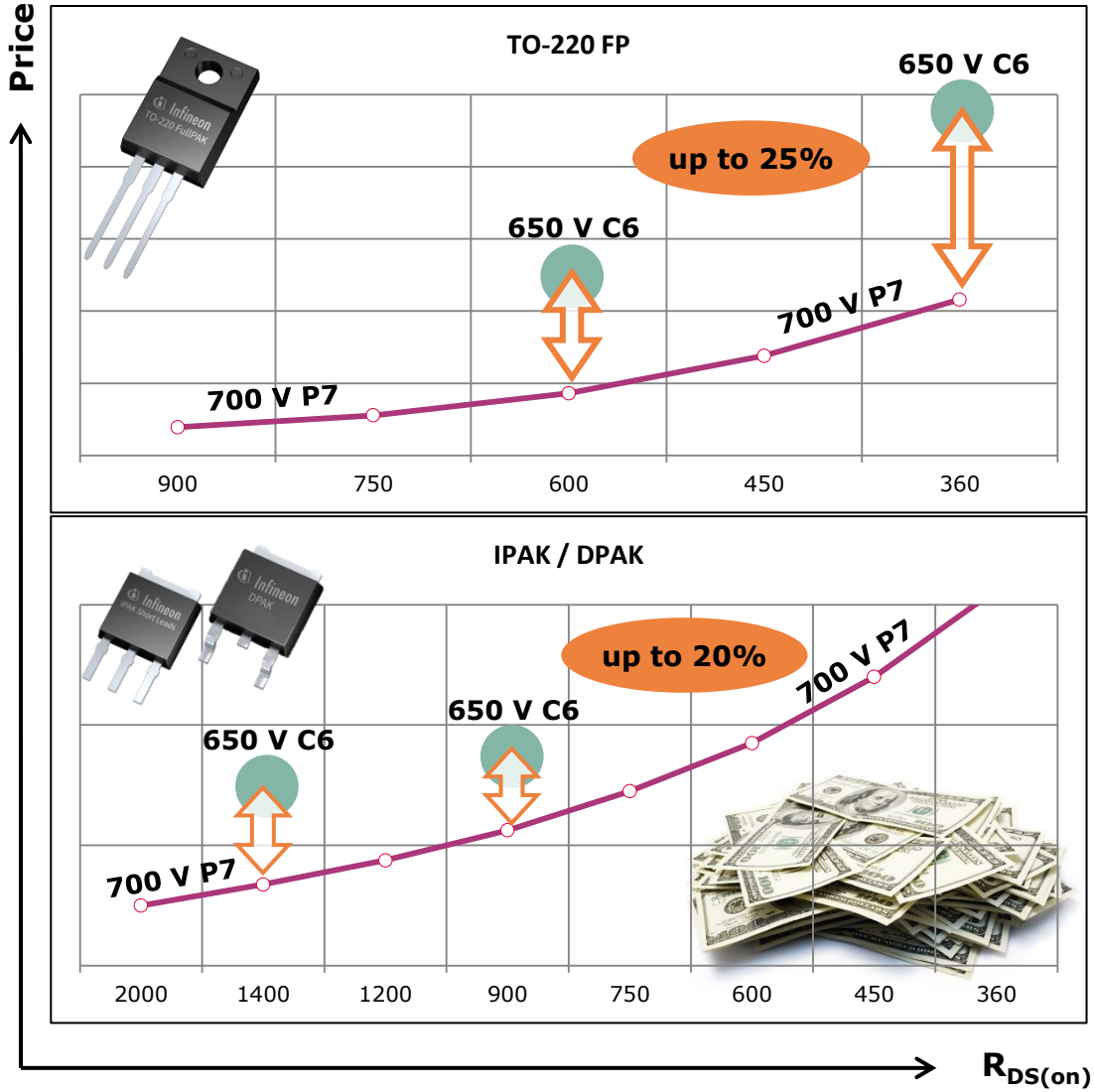

700 V P7 commercial aspects

- **Highly cost competitive technology**
- At TO-220 FP a ratio of up to 25% can be realized compared to previous C6 technology
- At IPAK/DAPK a price ratio up to 20% compared to previous C6 technology

Remark:

The given indications are based on standard prices by considering high volumes (>>500 kpcs/yr)

Single price points can differ from this indication

Copyright © Infineon Technologies AG 2017. All rights reserved.

700 V CoolMOS™ P7 to offer following key features and key benefits towards customers

700 V CoolMOS™ P7

The right choice to empower your application

Key features

- Finely graduated $R_{DS(on)}$ steps
- High switching frequency capable
- Integrated Zener diode
- Extremely low losses due to very low FOM $R_{DS(on)}*Q_g$ and $R_{DS(on)}*E_{oss}$
- Excellent thermal behavior
- Fully fulfilling EMI requirements

Key benefits

- Cost competitive technology
- Leading to less magnetics and supports lower BOM costs
- Efficiency gain at higher switching speed
- Enabler for smaller form factors and high power density designs
- High ESD ruggedness
- Up to 4% efficiency gain and 15 K lower device temperature compared to competition

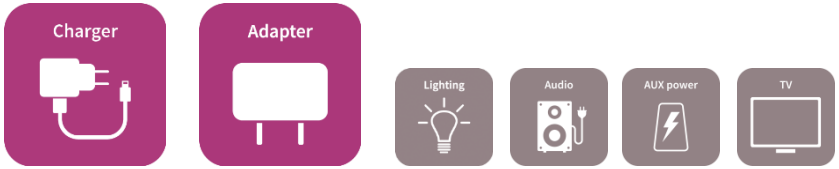

Copyright © Infineon Technologies AG 2017. All rights reserved.

700 V CoolMOS™ P7 ESD protection reduces failures and offers cost ratio for customers

ESD protection mechanism

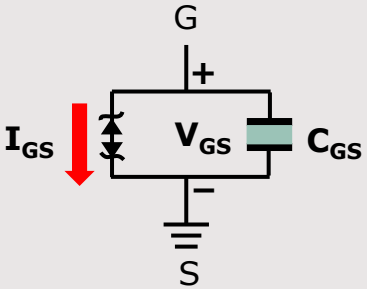

During ESD event:

- V_{GS} is clamped by Zener diode
- I_{GS} flows through Zener diode
- Protection of gate oxide

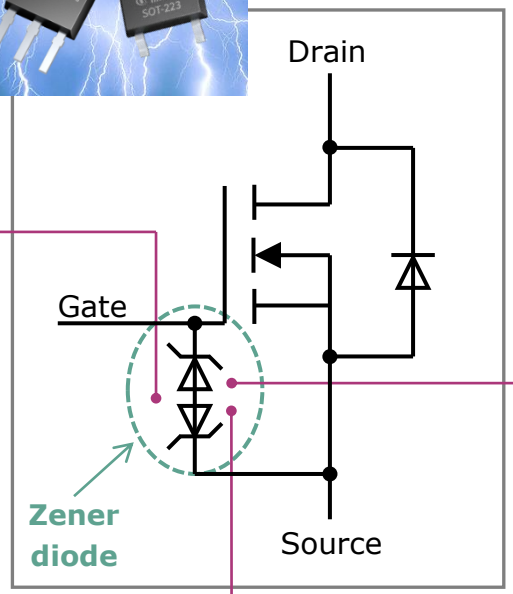

CoolMOS™ P7 ESD robustness

HBM:

- 0.75 – 2.00 Ω: 1–2 kV (Class 1C)
- 0.36 – 0.60 Ω: 2–4 kV (Class 2)

CDM:

- >1 kV (Class C3)

Customer benefit

- Increased ESD robustness on product level
- Reduced field failure rate at customers production line
- Improved assembling yield and cost ratio for customers

Copyright © Infineon Technologies AG 2017. All rights reserved.

700 V CoolMOS™ P7 is able to convince with lowest switching losses (EOSS)

Switching losses (E_{OSS})

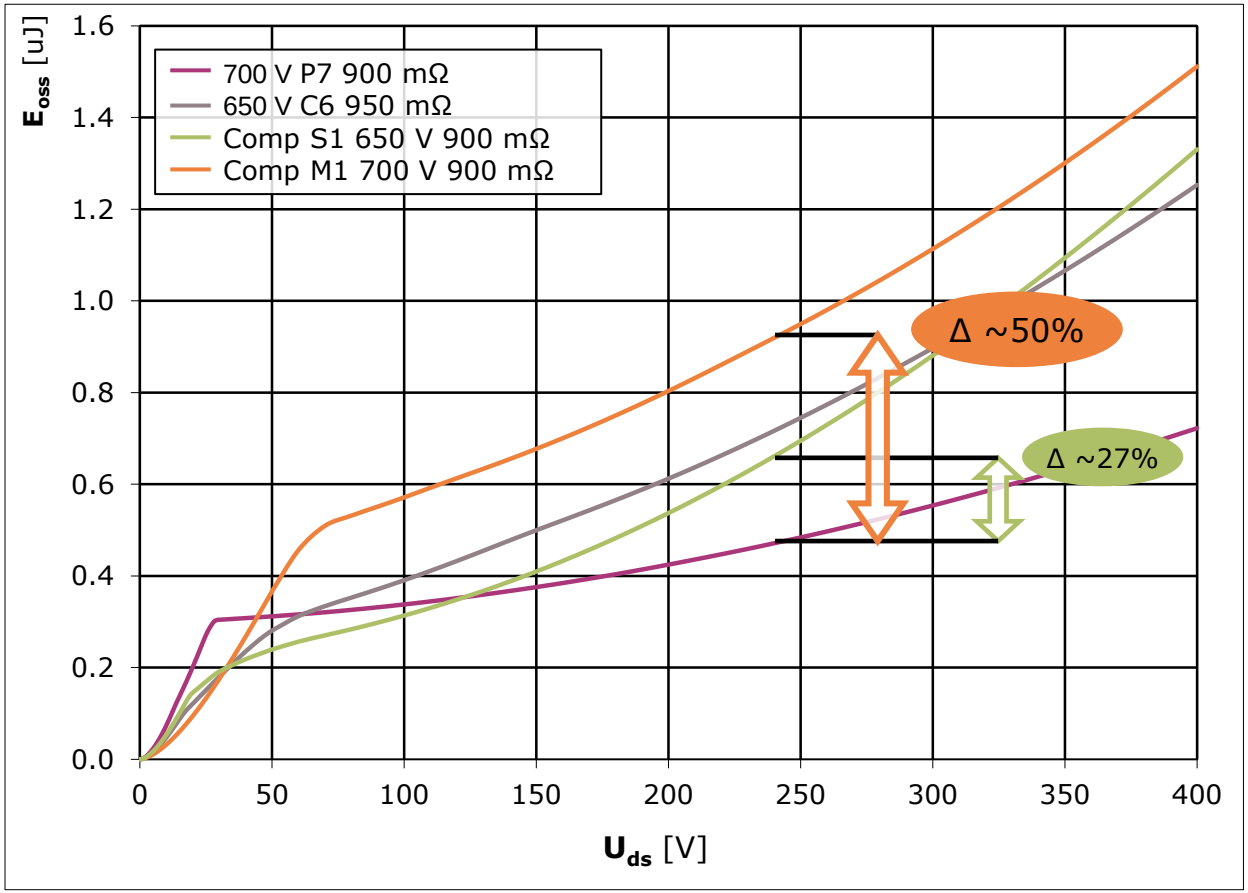

Key statement

700 V P7 shows:

- **significant lower losses**
- from 27% up to 50% compared to similar competitor devices
- around 34% improvements compared to previous Infineon C6 technology

E_{oss} calculated based on C_{oss} measurement - applied at Infineon's characterization laboratory

Copyright © Infineon Technologies AG 2017. All rights reserved.

Best $R_{DS(on)}$ dependency over T_j of any previous CoolMOS™ devices ever

$R_{DS(on)}$ dependency over T_j

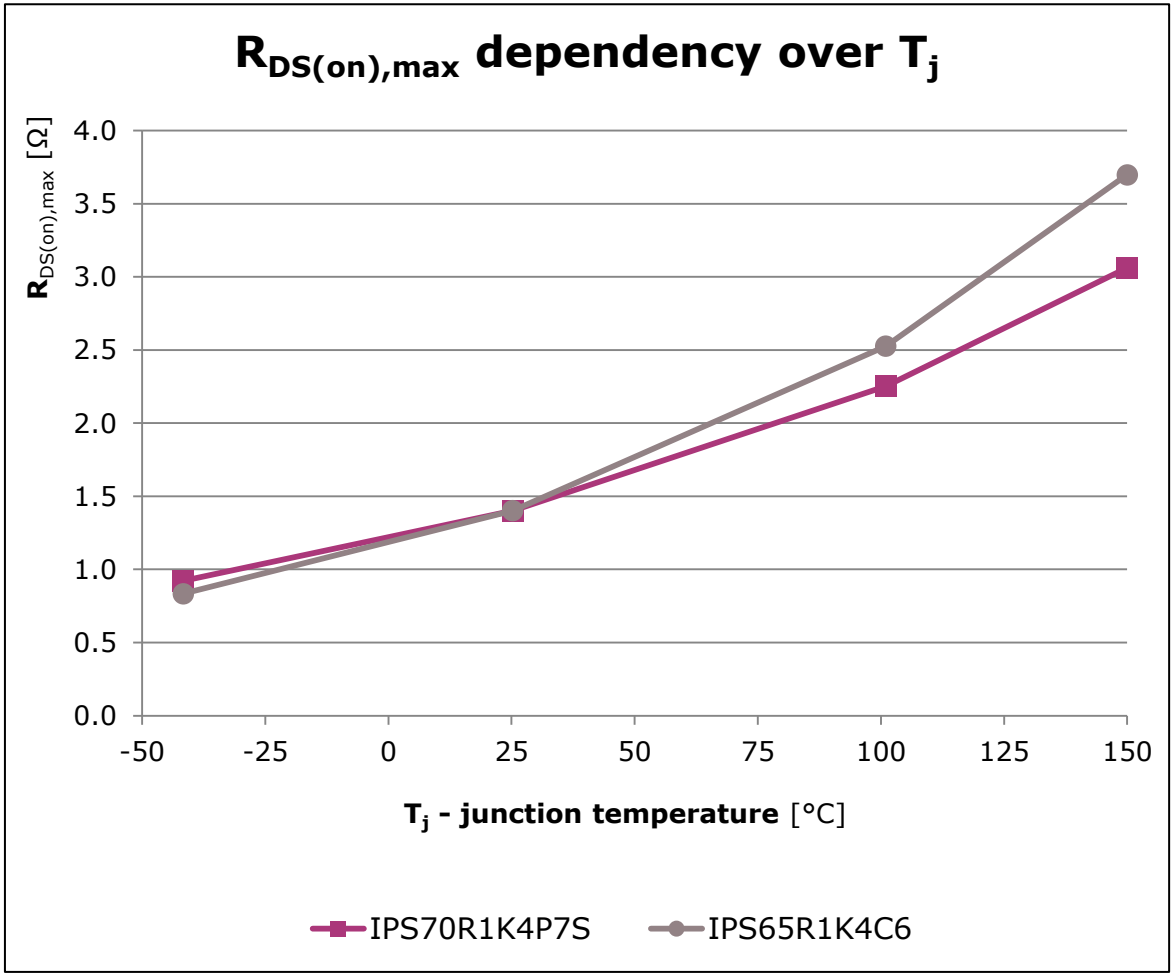

Δ ~21%

Key Statement

700 V P7 offers:

- lower $R_{DS(on)}$ increase with increasing junction temperature than any previous CoolMOS™ technology
- This benefits to reduced conduction losses at target application especially at low input voltage (low line operation)

Copyright © Infineon Technologies AG 2017. All rights reserved.

700 V CoolMOS™ P7 developed with low $V_{GS(th)}$ and within a very narrow tolerance band

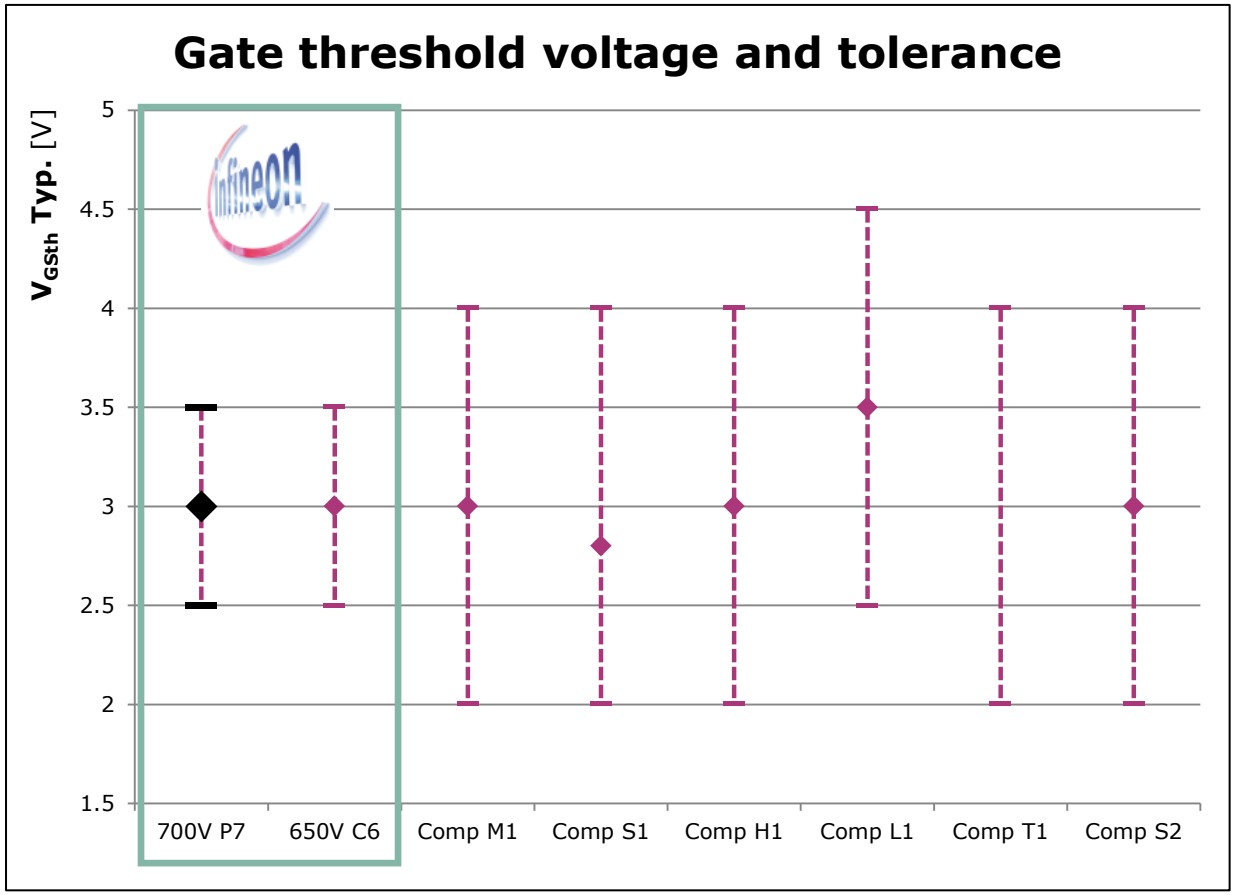

Ease-of-use benefits

Easy to drive

- Avoiding MOSFET linear mode operation
- Allowing lower driving voltage
- Reducing idle loss

Easy to design in

- Increased design freedom

Infineon identified as only supplier offering such low threshold values

Copyright © Infineon Technologies AG 2017. All rights reserved.

Part of your life. Part of tomorrow.