ESD/Surge Protection Diodes

Quick Start Guide

Edition 2014

Table of Contents

1. Glossary, Summary and Guidelines for Essential Parameters

2. Human Interface Devices

- 2.1. Keyboard, Keypad, Touchpad, Buttons
- 2.2. Headphone Jack, Speaker, Headset

3. High Speed Interfaces

- 3.1. USB 2.0 Single Port
- 3.2. USB 2.0 Dual Ports
- 3.3. USB 3.0 Super Speed
- 3.4. HDMI 1.3, HDMI 1.4 and DisplayPort
- 3.5. MHL Interface
- 3.6. Serial-ATA (SATA, e-SATA)
- 3.7. Gigabit Ethernet
- 3.8. xDSL (ADSL, VDSL)
- 3.9. Vcc Line Protection

4. Antenna Protection

- 4.1. GPS
- 4.2. FM Radio, Mobile TV,
- 4.3. NFC
- 4.4. WLAN, Bluetooth

5. Want to know more?

Copyright © Infineon Technologies 2012. All rights reserved.

Glossary of Essential Parameters

- R_{DYN} is the dynamic resistance of the diode, which is calculated according to the procedure described in Infineon AN210.
- V_{BR} is the break down voltage defined at I_R = -1mA.
- V_{RWM} is the maximum reverse working voltage of the diode.
- V_{ESD} is the maximum ESD rating of the TVS diode as specified for contact ESD in IEC61000-4-2.
- V_{CL} is the clamping voltage of the diode. In this guide it is specified at a TLP current of 16A, which is equivalent to nearly 8kV IEC61000-4-2. For clamping voltage values at other ESD levels please refer to product data sheets under ESD Protection & EMI Protection - Infineon Technologies.
- C_L is the parasitic capacitance of the diode at 1MHz and 0V bias.
- I_R is the reverse current of the diode specified at a given reverse voltage, V_R. Unless otherwise specified, I_R values are shown in this guide at $V_R = V_{RWM}$

Copyright © Infineon Technologies 2012. All rights reserved.

Essential Parameters Summary

R_{DYN}	Dynamic Resistance
V_{BR}	Breakdown Voltage @ I_R = 1mA
V_{RWM}	Reverse Max Working Voltage
V_{ESD}	Destruction Voltage
V_{CL}	Clamping Voltage
C_L	Diode Capacitance

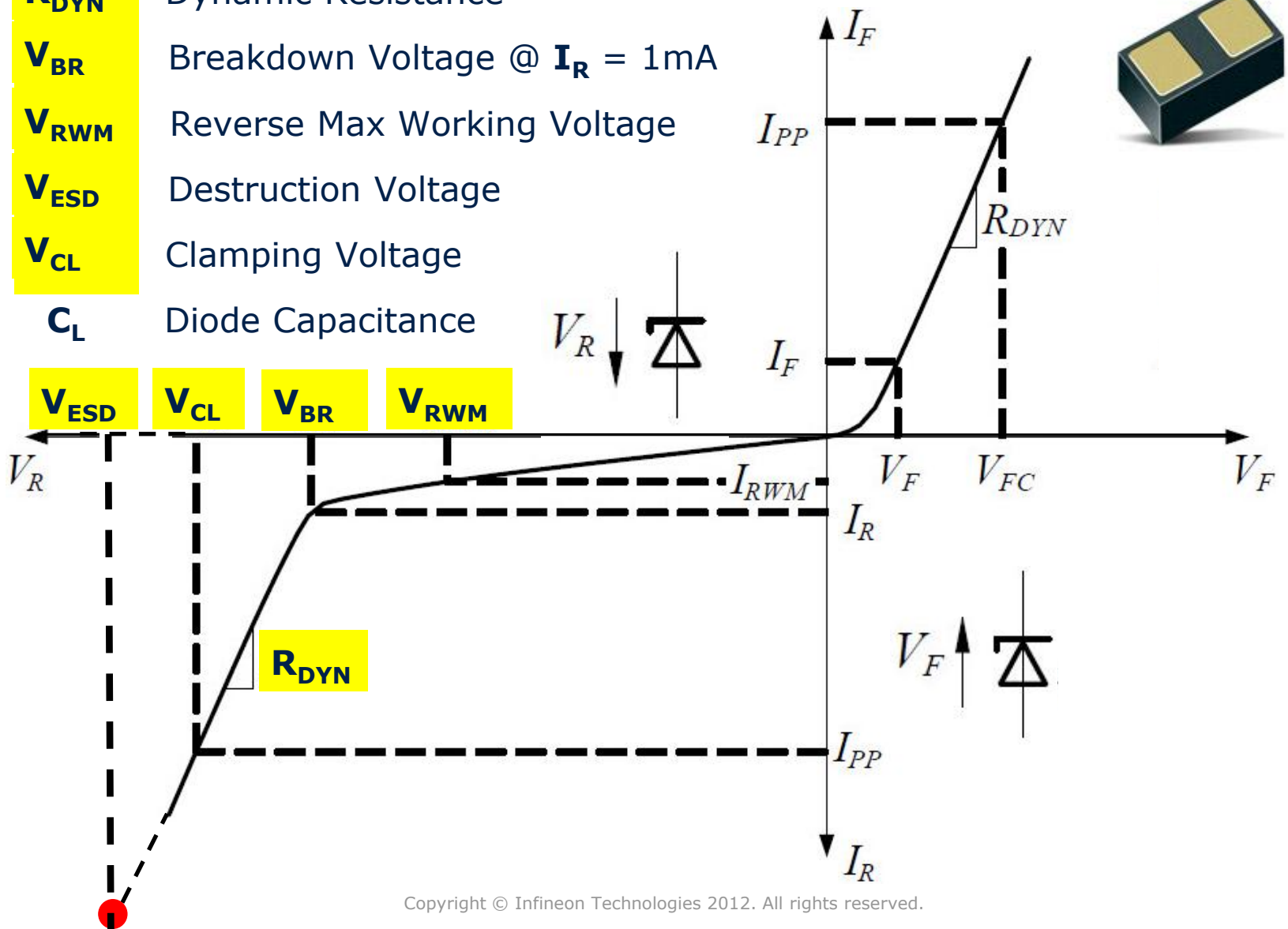

Copyright © Infineon Technologies 2012. All rights reserved.

Infineon's TVS Portfolio for Wireless applications

ESD Service Centers

Standard Interfaces
(Display, Audio, Touchscreen, …)

- Package Size:
  01005 / 0201 / 0402 (1-line),
  0402 (2-line), 0303 (4-line)
- V_{RMW} = ±3.3 … 24 V
- C_{typ} = 2.5 … 48 pF
- R_{dyn} = 0.2 … 1 Ω
- V_{ESD} ≥ ±15 kV

High-Speed Interfaces
(USB2.0, USB3.0, HDMI, DP …)

- Package Size:
  01005 / 0201 / 0402 (1-line),
  0403 (2-line), 0403 (4-line)
- V_{RMW} = ±3.3 … 5.3 V
- C_{typ} = 0.2 … 1 pF
- R_{dyn} = 0.2 … 0.7 Ω
- V_{ESD} ≥ ±15 kV

Antennas
(RF, NFC, GPS …)

- Package Size:
  01005 / 0201 / 0402 (1-line)
- V_{RMW} = ±3.6 … 18.5 V
- C_{typ} = 0.1 … 1 pF
- R_{dyn} = 0.2 … 0.6 Ω
- V_{ESD} ≥ ±15 kV

Power lines
& Surge

- Package Size:
  0201 / 0402 / 0603 / SC79 (1-line)
  SOT23 (2-line)
- V_{RMW} = ±5.0 … 24 V
- C_{typ} = 4 … 430 pF
- R_{dyn} = 0.06 … 0.6 Ω
- I_{SURGE} = 1 … 50 A

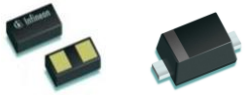

Mobile Devices Interfaces Protected with IFX TVS

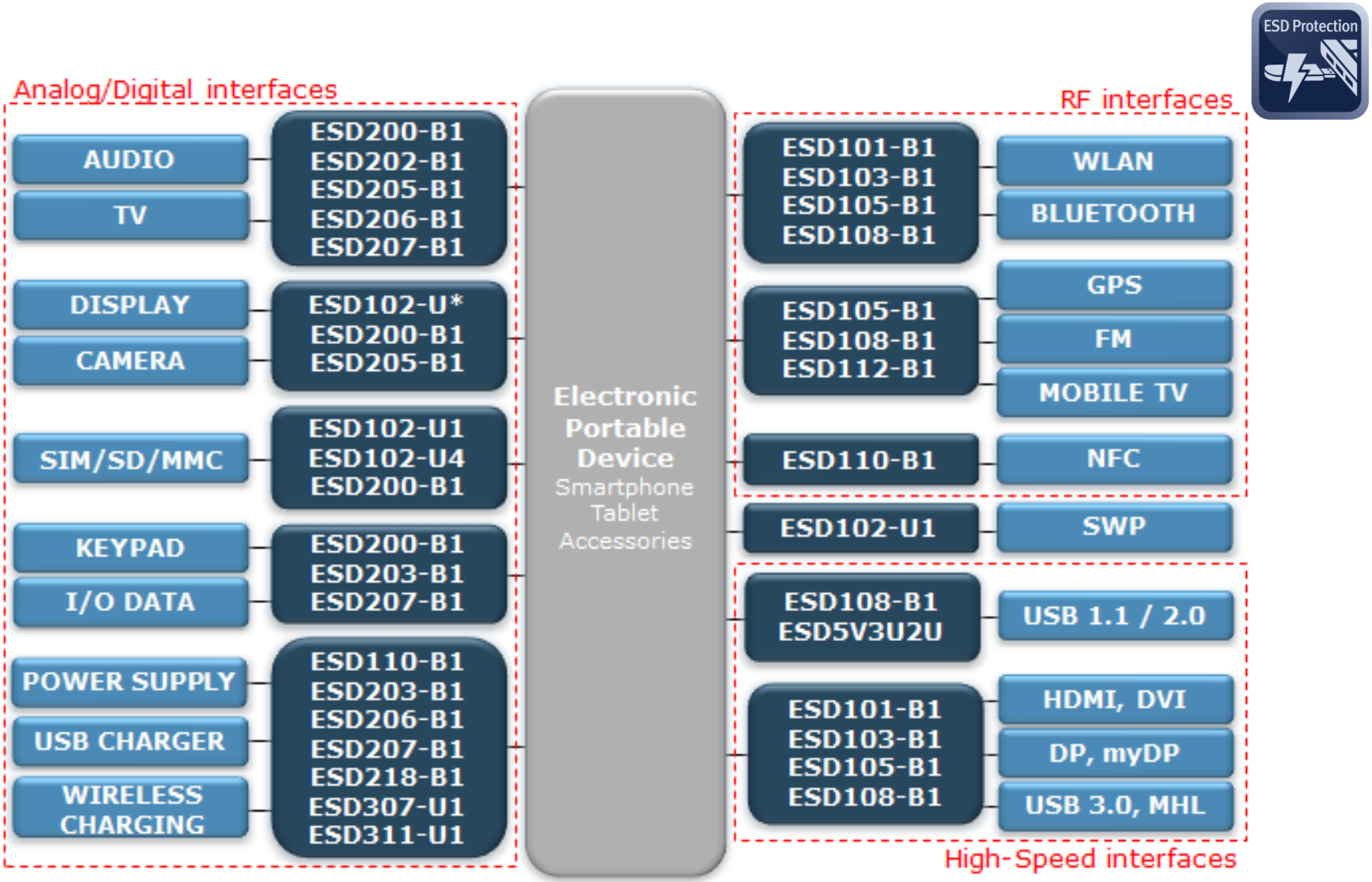

Human Interface Devices (HID) *(cont.)*
Keyboard, Keypad, Touchpad, Buttons

Main application requirements

- Robust ESD protection is required for keyboards, keypads, buttons, and other human interface devices because they are heavily exposed to ESD generated by consumers during routine use.
- ESD can be also self-generated by the equipment if it has moving parts or carries certain materials e.g. printers and copy machines with sliding parts carrying paper sheets.
- In the case of battery-powered equipment, ESD diodes with very low leakage current are required to extend battery life.

Schematic

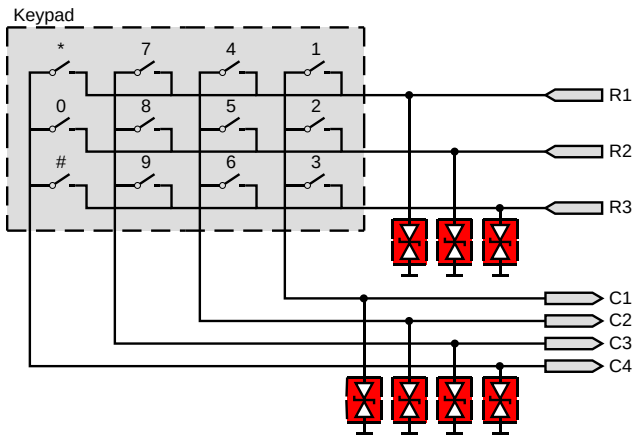

Recommended ESD protection parts

Part Name	Description	V_{RWM}	V_{ESD} 1)	R_{DYN} 2)	V_{CL} 3) @ I_{TLP}	$I_{R\ max}$	$C_{L\ typ}$
ESD200-B1-CSP0201	1-Line 0201 CSP	±5.5V	±16kV	0.20Ω	13V@16A	100nA	6.5pF
ESD202-B1-CSP01005	1-Line 01005 CSP	±5.5V	±12kV	0.20Ω	20V@16A	100nA	5.5pF
ESD203-B1-02EL / 02ELS	1-Line 0402 / 0201 Plastic	±12V	±30kV	0.29Ω	17V@16A 23V@30A	50nA	6pF
ESD207-B1-02EL / 02ELS	1-Line 0402 / 0201 Plastic	±3.3V	±30kV	0.13Ω	7V@16A 9V@30A	50nA	14pF

1) Electrostatic discharge as per IEC61000-4-2, contact discharge; 3) TLP clamping voltage for 100 ns pulse length;
2) Dynamic resistance (ON-resistance) evaluated with TLP measurement (100 ns pulse length);

Copyright © Infineon Technologies 2012. All rights reserved.

Human Interface Devices (HID) *(cont.)*
Headphone Jack, Speaker, Headset

Main application requirements

- An Audio CODEC is frequently more susceptible to ESD than many other ICs because it interfaces directly with external connectors, such as headset jacks, where ESD discharges can enter.
- For maximum protection, these highly susceptible audio systems require protection devices with extremely low dynamic resistance and low clamping voltages.
- Since audio signals are low frequency analog signals, usually less than 30kHz, diode capacitance is usually a "don't care".
- Bidirectional diodes are normally compulsory to accommodate audio signals.

Schematic

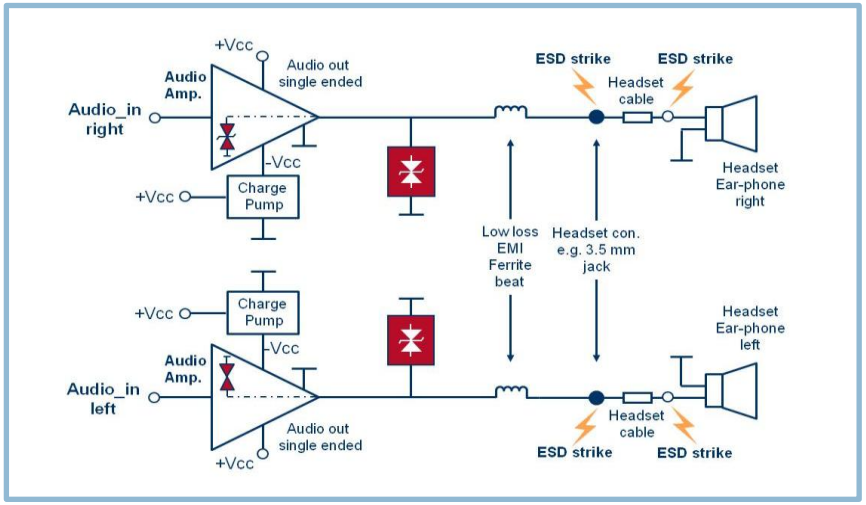

Recommended ESD protection parts

Part Name	Description	V_{RWM}	V_{ESD} 1)	R_{DYN} 2)	V_{CL} 3) @ I_{TLP}	$I_{R\ max}$	$C_{L\ typ}$
ESD200-B1-CSP0201	1-Line 0201 CSP	±5.5V	±16kV	0.20Ω	13V@16A 17V@30A	100nA	6.5pF
ESD205-B1-02EL / 02ELS	1-Line 0402 / 0201 Plastic	±5.5V	±20kV	0.22Ω	10V@16A 13V@30A	100nA	5pF
ESD206-B1-02EL / 02ELS	1-Line 0402 / 0201 Plastic	±5.5V	±30kV	0.15Ω	9V@16A 11V@30A	100nA	13pF
ESD207-B1-02EL / 02ELS	1-Line 0402 / 0201 Plastic	±3.3V	±30kV	0.13Ω	7V@16A 9V@30A	50nA	14pF

1) Electrostatic discharge as per IEC61000-4-2, contact discharge; 3) TLP clamping voltage for 100 ns pulse length;
2) Dynamic resistance (ON-resistance) evaluated with TLP measurement (100 ns pulse length);

Copyright © Infineon Technologies 2012. All rights reserved.

High Speed Interfaces
USB 2.0 Single Port (USB 2.0, Micro USB)

Main application requirements

- USB ports are very susceptible to over-voltage transients like ESD discharges and Cable Discharge Events (CDE).
- Transients can propagate through the connector down to the data lines and end up in the heart of the IC/ASIC. To avoid damage, robust protection is required on data lines D+, D- and on the V_{cc} power-line.
- For high-speed USB2.0, the signal voltage on the D+,D- lines vary between -0.5V…+0.5V. For USB Full and Low Speed and for V_{cc} the TVS diode has to handle 5V.
- The data Rate of high-speed USB2.0 is 480Mbps. Capacitive loading from discrete components needs to be minimized for optimal signal integrity.

Schematic

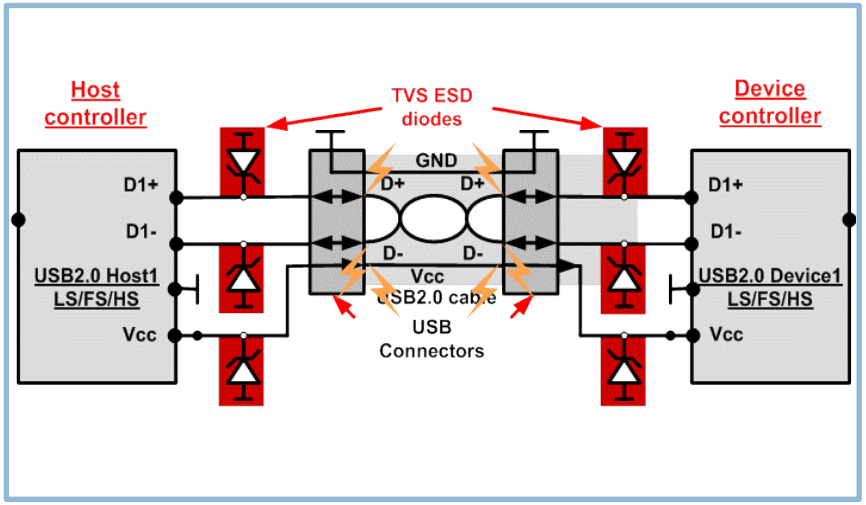

Recommended ESD protection parts

Part Name	Description	V_{RWM}	V_{ESD} 1)	R_{DYN} 2)	V_{CL} 3) @ I_{TLP}	$I_{R\ max}$	$C_{L\ typ}$
ESD108-B1-CSP0201	1-Line 0201 CSP	±5.5V	±25kV	0.76Ω	20V@16A 31V@30A	50nA	0.28pF
ESD5V3U2U-03LRH	2-Line 0402 Plastic	5.3V	±20kV	0.60Ω	19V@16A 28V@30A	50nA	0.4pF
ESD5V3U2U-03F	2-Line TSFP Leaded	5.3V	±20kV	0.60Ω	19V@16A 28V@30A	50nA	0.4pF

1) Electrostatic discharge as per IEC61000-4-2, contact discharge; 3) TLP clamping voltage for 100 ns pulse length;
2) Dynamic resistance (ON-resistance) evaluated with TLP measurement (100 ns pulse length);

Copyright © Infineon Technologies 2012. All rights reserved.

High Speed Interfaces
USB 3.0 Super Speed

Main application requirements

- Due to their construction USB3.0 pins are highly exposed to ESD originating during routine use and the newer USB3.0 microcontrollers are extremely susceptible to ESD.
- The USB3.0 link data transmission rate of 5GBps places formidable requirements on the capacitance of protection components, which needs to be low to achieve the highest signal integrity.
- For these reasons, Infineon offers tailored USB3.0 protection with low V_{CL} , high V_{ESD}, and ultralow C_L

Schematic

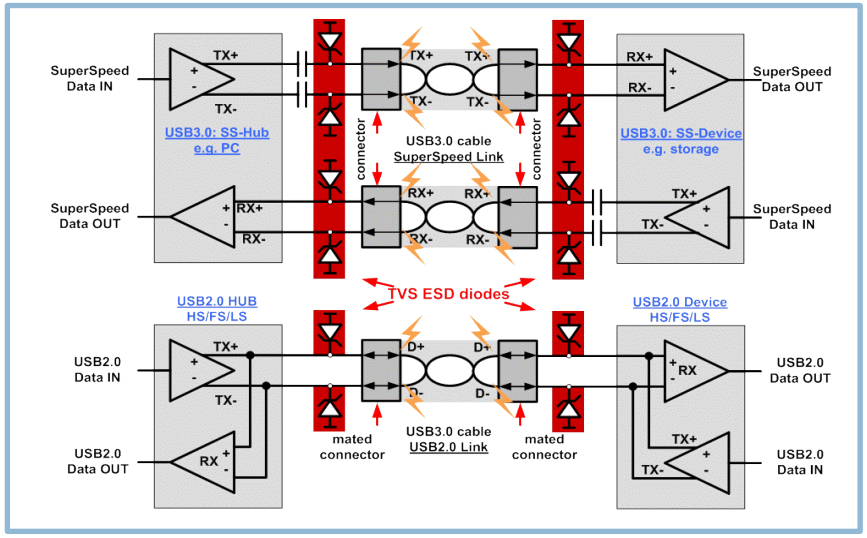

Recommended ESD protection parts

Part Name	Description	V_{RWM}	V_{ESD} 1)	R_{DYN} 2)	V_{CL} 3) @ I_{TLP}	$I_{R\ max}$	$C_{L\ typ}$
ESD102-U1-02ELS	1-Line 0201 Plastic	3.3V	±20kV	0.20Ω	8V@16A 11V@30A	50nA	0.4pF
ESD102-U2-099EL	2-Line 0402 Plastic	3.3V	±20kV	0.20Ω	8V@16A 11V@30A	50nA	0.4pF
ESD102-U4-05L	4-Line 0503 Plastic	3.3V	±20kV	0.20Ω	8V@16A 11V@30A	50nA	0.4pF
ESD3V3U4ULC	4-Line 0904 Plastic	3.3V	±20kV	0.20Ω	8V@16A 11V@30A	50nA	0.4pF

1) Electrostatic discharge as per IEC61000-4-2, contact discharge; 3) TLP clamping voltage for 100 ns pulse length;
2) Dynamic resistance (ON-resistance) evaluated with TLP measurement (100 ns pulse length);

Copyright © Infineon Technologies 2012. All rights reserved.

High Speed Interfaces
HDMI 1.3 / 1.4, DisplayPort

Main application requirements

- HDMI uses small CMOS geometries to increase data rate performance. The small geometries of these graphic chips make them highly susceptible to ESD.
- Another common threat when plugging and unplugging cables are Cable Discharge Events (CDE). Common practice in the industry is to test CDE to the IEC61000-4-2 standard.
- ESD protection required on all differential pairs and V_{cc}.
- The signal voltage levels vary between 2.5V and 3.5V, and V_{cc}=5V.
- Maximum data rate is 3.4Gb/s per pair. Some common ESD solutions cause signal distortion due to high capacitance resulting in poor signal integrity and video quality.

Schematic (HDMI)

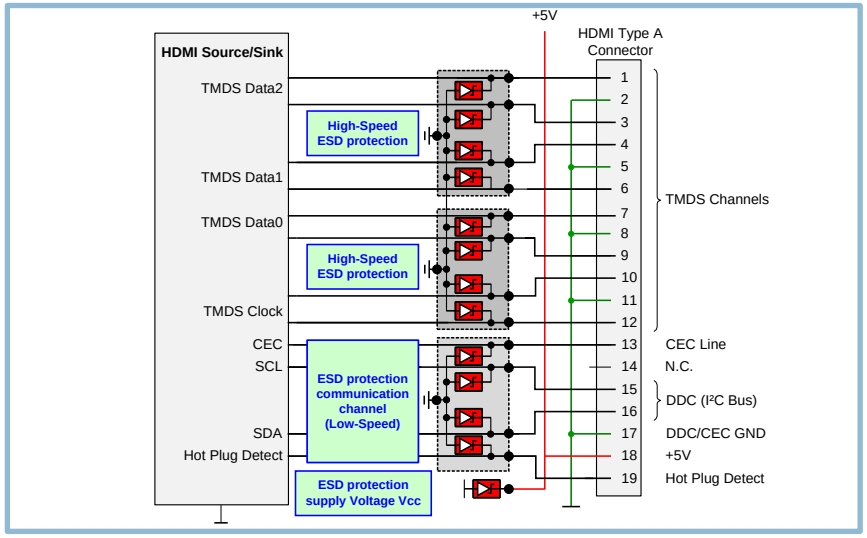

Recommended ESD protection parts

Part Name	Description	V_{RWM}	V_{ESD} 1)	R_{DYN} 2)	V_{CL} 3) @ I_{TLP}	$I_{R\ max}$	$C_{L\ typ}$
ESD102-U1-02ELS	1-Line 0201 Plastic	3.3V	±20kV	0.20Ω	8V@16A 11V@30A	50nA	0.4pF
ESD102-U2-099EL	2-Line 0402 Plastic	3.3V	±20kV	0.20Ω	8V@16A 11V@30A	50nA	0.4pF
ESD102-U4-05L	4-Line 0503 Plastic	3.3V	±20kV	0.20Ω	8V@16A 11V@30A	50nA	0.4pF
ESD5V3U4U-HDMI	4-Line 0904 Plastic	5.3V	±20kV	0.60Ω	19V@16A 28V@30A	50nA	0.4pF

1) Electrostatic discharge as per IEC61000-4-2, contact discharge; 3) TLP clamping voltage for 100 ns pulse length;
2) Dynamic resistance (ON-resistance) evaluated with TLP measurement (100 ns pulse length);

Copyright © Infineon Technologies 2012. All rights reserved.

High Speed Interfaces
MHL

Main application requirements

- The **Mobile High-Definition Link** (**MHL**) is a mobile audio/video interface that uses the existing Micro USB connector with an extra cable for directly connecting mobile phones, digital cameras and other portable devices to the HDMI port of High-Definition Televisions (HDTV) and Displays.
- The MHL standard features a single cable with a low pin-count interface able to support high-definition video and digital audio while simultaneously charging the connected device.
- A data rate ~2Gbps for transmission of 1080i/60 signal is required in broadcast applications.
- Assuming no external charging capability, the MHL signaling voltage is ≤3Vpeak.

Schematic

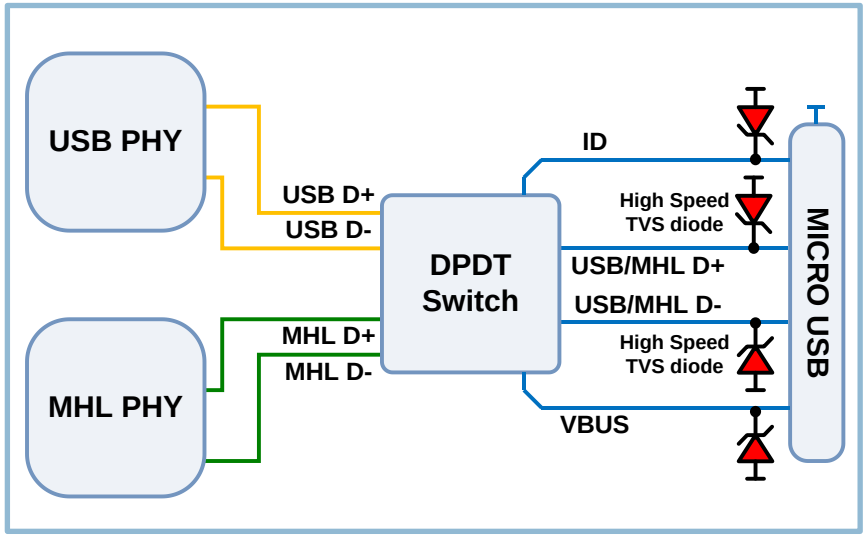

Recommended ESD protection parts

Part Name	Description	V_{RWM}	V_{ESD} 1)	R_{DYN} 2)	V_{CL} 3) @ I_{TLP}	$I_{R\ max}$	$C_{L\ typ}$
ESD102-U1-02ELS	1-Line 0201 Plastic	3.3V	±20kV	0.20Ω	8V@16A 11V@30A	50nA	0.4pF
ESD102-U2-099EL	2-Line 0402 Plastic	3.3V	±20kV	0.20Ω	8V@16A 11V@30A	50nA	0.4pF
ESD102-U4-05L	4-Line 0503 Plastic	3.3V	±20kV	0.20Ω	8V@16A 11V@30A	50nA	0.4pF
ESD3V3U4ULC	4-Line 0904 Plastic	3.3V	±20kV	0.20Ω	8V@16A 11V@30A	50nA	0.4pF

1) Electrostatic discharge as per IEC61000-4-2, contact discharge; 3) TLP clamping voltage for 100 ns pulse length;
2) Dynamic resistance (ON-resistance) evaluated with TLP measurement (100 ns pulse length);

Copyright © Infineon Technologies 2012. All rights reserved.

High Speed Interfaces
Serial ATA 3GBps and 6GBps

Main application requirements

- Serial ATA supports data rates of 3GBps and 6GBps with a DC blocking design and a minimum voltage swing requirement of V_{pp} = 400mV.
- SATA voltage swing can rise to 700mV, and in dedicated SATA II mode, the peak voltage can rise to 1600mV (on one line the signal is +800mV vs. GND and on the other line it is -800mV).
- Normal location for ESD diodes would be between the blocking capacitors (~10nF) and the connector to keep the blocking capacitor safe from ESD.
- Ultralow capacitance bi-directional components are compulsory to maintain the signal integrity at the high data transmission rates of Serial ATA interfaces.

Schematic

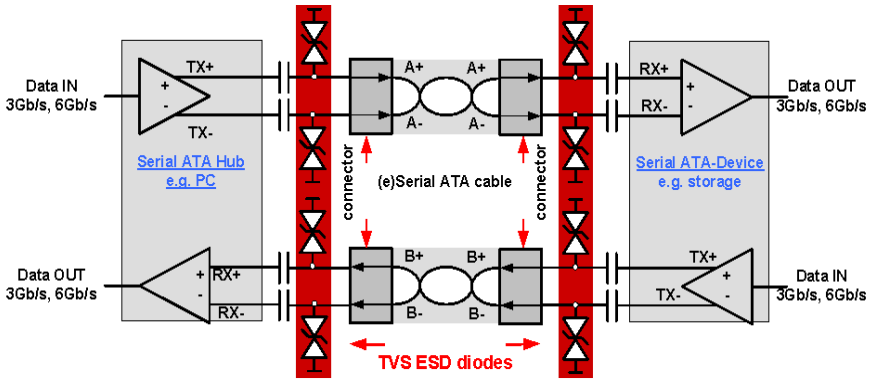

Recommended ESD protection parts

Part Name	Description	V_{RWM}	V_{ESD} 1)	R_{DYN} 2)	V_{CL} 3) @ I_{TLP}	$I_{R\ max}$	$C_{L\ typ}$
ESD108-B1-CSP0201	1-Line 0201 CSP	±5.5V	±25kV	0.76Ω	20V@16A 31V@30A	50nA	0.28pF
ESD112-B1-02EL/ELS	1-Line 0402 / 0201 Plastic	±5.3V	±20kV	1.00Ω	29V@16A 38V@30A	50nA	0.23pF

1) Electrostatic discharge as per IEC61000-4-2, contact discharge; 3) TLP clamping voltage for 100 ns pulse length;
2) Dynamic resistance (ON-resistance) evaluated with TLP measurement (100 ns pulse length);

Copyright © Infineon Technologies 2012. All rights reserved.

High Speed Interfaces
Gigabit Ethernet

Main application requirements

- Gigabit Ethernet operates transmitting and receiving data on four twisted cable pairs.
- The data signal voltage varies between 1.0V (100 and 1000Base) & 2.5V (10Base Ethernet).
- The data rates are 125Mb/s (100 and 1000 Base) and 12.5Mb/s (10 Base Ethernet).
- ESD robustness is required on both sides of the transformer.

Schematic

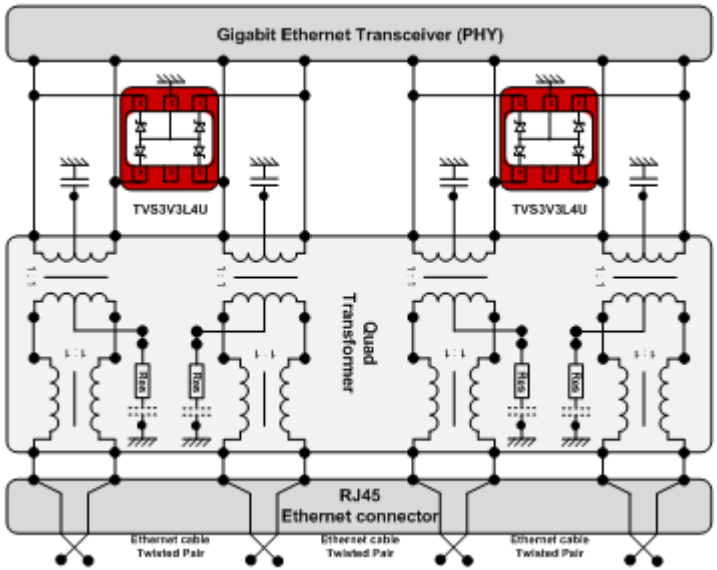

Recommended ESD protection parts

Part Name	Description	V_{RWM}	V_{ESD} 1)	EFT	Surge	R_{DYN} 2)	V_{CL} 3) @ I_{TLP}	$I_{R\ max}$	$C_{L\ typ}$
TVS3V3L4U	4-Line SC74 Plastic	3.3V	±30kV	80A	20A	0.09Ω	6V@16A 7V@30A	50nA	2.0pF

1) Electrostatic discharge as per IEC61000-4-2, contact discharge; 3) TLP clamping voltage for 100 ns pulse length;
2) Dynamic resistance (ON-resistance) evaluated with TLP measurement (100 ns pulse length);

Copyright © Infineon Technologies 2012. All rights reserved.

High Speed Interfaces
VDSL, ADSL and other Broadband Applications

Main application requirements

- Wire line telecom systems are vulnerable to ESD, surge and cable discharge events and therefore subject to strict regulatory compliance to ensure system reliability.
- Primary protection is typically implemented where the outside line enters a structure, and secondary protection is applied to the equipment itself (see picture).
- The system is usually required to pass surge, power contact and power induction tests according to the ITU K20/21 telecommunication standard.
- The high-speed lines on the secondary side of the transformer demand protection devices with low capacitance to avoid signal distortion on the line.

Schematic

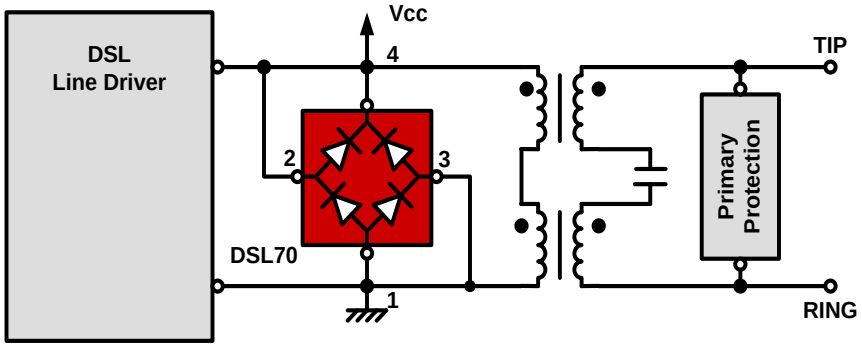

Recommended ESD protection parts

Part Name	Description	V_{RWM}	V_{ESD} 1)	EFT	Surge	R_{DYN} 2)	$V_{CL\text{-}FWD}$ 3) @ I_{TLP}	$I_{R\ max}$	$C_{L\ typ}$
DSL70	2-Line SOT143 Plastic	50V[4]	±15kV	80A	27A	0.10Ω	2.5V+Vcc@16A 4V+Vcc@30A	<5nA	2.5pF

1) Electrostatic discharge as per IEC61000-4-2, contact discharge; 3) TLP clamping voltage for 100 ns pulse length – forward direction;
2) Dynamic resistance (ON-resistance) evaluated with TLP measurement (100 ns pulse length);

[4] Rail to rail configuration

Copyright © Infineon Technologies 2012. All rights reserved.

ESD Protection
V_{CC} Lines

INFINEON ESD Protection Solution

- Infineon offers a variety of general purpose diodes tailored for protection of power lines.
- The diodes offer very robust ESD absorption capability, exceeding the IEC61000-4-2 industry standard, and help to increase system level reliability of modern electronic devices.
- Due to their very low dynamic resistance, these diodes quickly clamp ESD strikes at very low voltages. After every ESD strike, the diodes recover very fast without any sign of degradation.
- The leakage current of the diode in normal operating conditions does not exceed 100nA max., favoring its application in battery-powered devices.
- These diodes are available in leadless packages with sizes down to 0.6 x 0.4 mm for maximum protection in the smallest area.

Recommended ESD protection parts

Part Name	Description	V_{RWM}	V_{ESD} 1)	R_{DYN} 2)	V_{CL} 3) @ I_{TLP}	$I_{R\ max}$	$C_{L\ typ}$
ESD206-B1-02EL/ELS/02V	1-Line 0402 /0201 / SC79 Plastic	±5.5V	±30kV	0.15Ω	9V@16A 11V@30A	100nA	13pF
ESD207-B1-02EL/ELS	1-Line 0402 / 0201 Plastic	±3.3V	±30kV	0.13Ω	7V@16A 9V@30A	50nA	14pF
ESD205-B1-02EL/ELS	1-Line 0402 / 0201 Plastic	±5.3V	±20kV	0.22Ω	10V@16A 13V@30A	100nA	5pF
ESD204-B1-02EL/ELS	1-Line 0402 / 0201 Plastic	-8/14V	±15kV	0.6Ω	28V@16A 35V@30A	50nA	4pF
ESD5V0L1B-02V	1-Line SC79 Plastic (leaded)	±5.0V	±25kV	0.4Ω	22V@16A 26V@30A	50nA	8.5pF

1) Electrostatic discharge as per IEC61000-4-2, contact discharge; 3) TLP clamping voltage for 100 ns pulse length;
2) Dynamic resistance (ON-resistance) evaluated with TLP measurement (100 ns pulse length);

Copyright © Infineon Technologies 2012. All rights reserved.

Antenna Protection
Global Positioning System (GPS)

Main application requirements

- Due to the high operating frequencies >1.5GHz, the ESD protection capacitance must be <<1pF.
- The protection device needs to be as linear as possible to avoid unwanted harmonics and intermodulation distortion in the presence of a strong RF interferer.
- To keep the residual ESD stress minimized for the frontend system, the protection device should have as low of a clamping voltage as possible.
- Small package sizes are favored to allow integration into miniaturized modules and frontend systems.

Schematic GNSS Application

GPS: 1575.42 MHz
GLONASS: 1598.0625 – 1609.3125 MHz
Galileo & COMPASS (北斗): 1559.052 – 1591.788 MHz

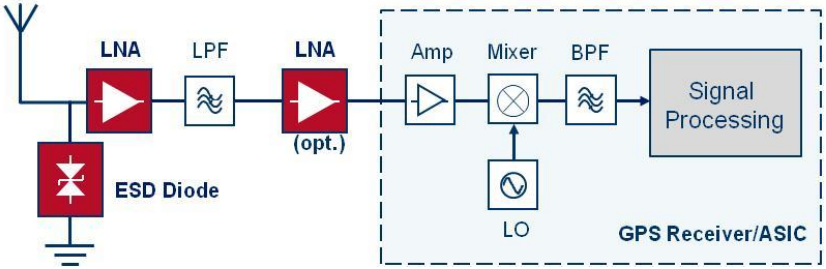

Recommended ESD protection parts

Part Name	Description	V_{RWM}	V_{ESD} 1)	R_{DYN} 2)	V_{CL} 3) @ I_{TLP}	$I_{R\ max}$	$C_{L\ typ}$
ESD108-B1-CSP0201	1-Line 0201 CSP	±5.5V	±25kV	0.76Ω	20V@16A 31V@30A	50nA	0.28pF
ESD105-B1-02EL/ELS	1-Line 0402 / 0201 Plastic	±5.5V	±25kV	0.50Ω	14V@16A 20@30A	50nA	0.25pF
ESD112-B1-02EL	1-Line 0402 / 0201 Plastic	±5.3V	±20kV	1.00Ω	29V@16A 38V@30A	50nA	0.23pF

1) Electrostatic discharge as per IEC61000-4-2, contact discharge; 3) TLP clamping voltage for 100 ns pulse length;
2) Dynamic resistance (ON-resistance) evaluated with TLP measurement (100 ns pulse length);

Copyright © Infineon Technologies 2012. All rights reserved.

Antenna Protection
FM Radio, Mobile TV

Main application requirements

- FM radio is a standard feature in most modern mobile phones and operates at frequencies from 76MHz to 108Mhz with an antenna power range of ≤20dBm.
- A protection circuit is necessary at the antenna to protect the delicate frontend system from ESD events originating during routine use.
- The protection device needs to have bidirectional characteristics and breakdown voltage from 5V to 10V to handle the DC free signal without clipping.
- Small package sizes are required to allow easier integration into miniaturized modules and frontend systems.

Schematic FM Radio

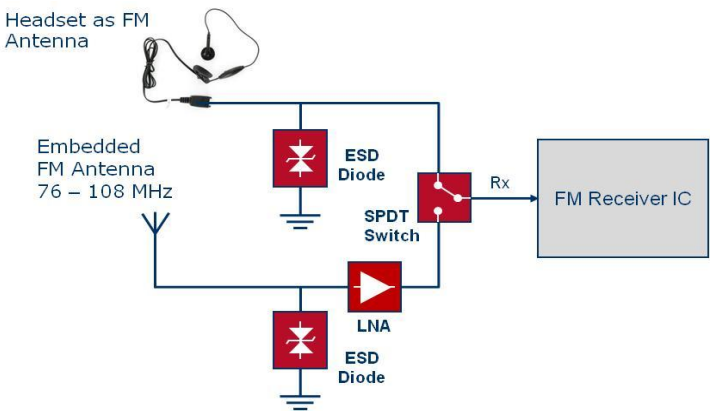

Recommended ESD protection parts

Part Name	Description	V_{RWM}	V_{ESD} 1)	R_{DYN} 2)	V_{CL} 3) @ I_{TLP}	$I_{R\ max}$	$C_{L\ typ}$
ESD108-B1-CSP0201	1-Line 0201 CSP	±5.5V	±25kV	0.76Ω	20V@16A 31V@30A	50nA	0.28pF
ESD105-B1-02EL/ELS	1-Line 0402 / 0201 Plastic	±5.5V	±25kV	0.50Ω	14V@16A 21@30A	50nA	0.25pF
ESD112-B1-02EL/ELS	1-Line 0402 / 0201 Plastic	±5.3V	±20kV	1.00Ω	29V@16A 38V@30A	50nA	0.23pF

1) Electrostatic discharge as per IEC61000-4-2, contact discharge; 3) TLP clamping voltage for 100 ns pulse length;
2) Dynamic resistance (ON-resistance) evaluated with TLP measurement (100 ns pulse length);

Copyright © Infineon Technologies 2012. All rights reserved.

Antenna Protection
Near Field Communication (NFC)

Main application requirements

- NFC is an up-coming feature in mobile phones to handle electronic cash, - payment and wireless access control. The carrier of 13.56MHz is modulated with low speed data rate. Range is strongly limited.
- The resonant loop antenna is often located in the mobile phone´s removable backplane. The ESD exposed connection pads to the phone´s mainboard (MB) must be ESD protected efficiently.
- To cope with the high RF amplitude @ the resonant loop antenna maximum working voltage of the TVS diode has to be > ±18V. Low TVS diode capacitance is mandatory to avoid a de-tuning of the antenna resonance.

Schematic

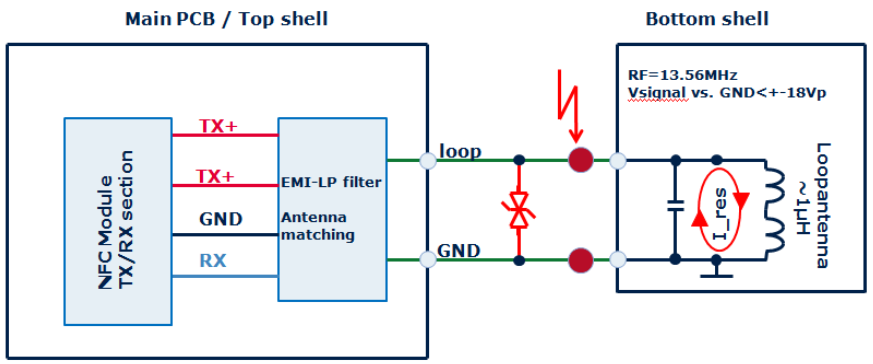

Recommended ESD protection parts

Part Name	Description	V_{RWM}	V_{ESD} 1)	R_{DYN} 2)	V_{CL} 3) @ I_{TLP}	$I_{R\ max}$	$C_{L\ typ}$
ESD110-B1-02EL/ELS	1-Line 0402 / 0201 Plastic	±18.5V	±15kV	0.60Ω	26V@16A 34V@25A	30nA	0.3pF

1) Electrostatic discharge as per IEC61000-4-2, contact discharge; 3) TLP clamping voltage for 100 ns pulse length;
2) Dynamic resistance (ON-resistance) evaluated with TLP measurement (100 ns pulse length);

Copyright © Infineon Technologies 2012. All rights reserved.

Antenna Protection
WLAN, Bluetooth

Main application requirements

- The RF antenna is highly exposed to ESD events. A proper ESD protection is required showing dedicated features for the use in RF transmitting systems.
  - Device capacitance has to be as small as possible to avoid an impact to the antenna matching.
  - Device linearity has to be very good to keep harmonics generation and intermodulation distortion on a very low level. As higher the TX power or RF interferer @ the RF TVS diode is, as higher the TVS diode linearity has to be.
- NO compromise in the ESD performance (e.g. R_{dyn}) even linearity requirements are high.

Schematic (WLAN)

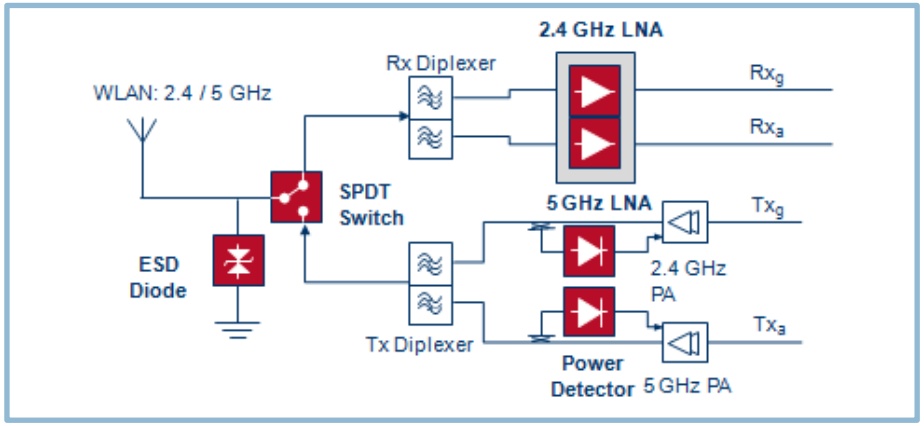

Recommended ESD protection parts

Part Name	Description	V_{RWM}	V_{ESD} 1)	R_{DYN} 2)	V_{CL} 3) @ I_{TLP}	$I_{R\ max}$	$C_{L\ typ}$
ESD108-B1-CSP0201	1-Line 0201 CSP	±5.5V	±25kV	0.76Ω	20V@16A 31V@30A	50nA	0.28pF
ESD105-B1-02EL/ELS	1-Line 0402 / 0201 Plastic	±5.5V	±25kV	0.50Ω	14V@16A 21@30A	50nA	0.25pF
ESD103-B1-02EL/ELS	1-Line 0402 / 0201 Plastic	±15V	±10kV	1.80Ω	48V@16A	50nA	0.10pF
ESD101-B1-02EL/ELS	1-Line 0402 / 0201 Plastic	±5.5V	±10kV	1.30Ω	29V@16A	50nA	0.10pF

1) Electrostatic discharge as per IEC61000-4-2, contact discharge; 3) TLP clamping voltage for 100 ns pulse length;
2) Dynamic resistance (ON-resistance) evaluated with TLP measurement (100 ns pulse length);

Copyright © Infineon Technologies 2012. All rights reserved.

Want to know more?
check www.infineon.com/esdprotection !

- **TVS Diode Data Sheets:** www.infineon.com/esdprotection/ESD & EMI products
- **Simulation Models** www.infineon.com/esdprotection/ESDSimulationModels
- **Application Guide for Protection (Brochure):** www.infineon.com/rpd_appguide_protection
- **Sample Kit: "Fast and Indestructible ESD Protection for Your Electronic System"**
- **Technical documentation** www.infineon.com/esdprotection/technical documents: ESD & EMI
  - *Additional Information*
  - *Application Notes*
  - *Material Content Sheet*
  - *PCB Design Data*
  - *Product Brief*
  - *Product Information*
  - *Simulation Data*
- **ESD Competency & Service** www.infineon.com/esdprotection/esdservice
- **ESD Protection Forum** www.infineon.com/esdprotection/esdforum

Copyright © Infineon Technologies 2012. All rights reserved.

Legal Disclaimer

- The information given in this document shall in no event be regarded as a guarantee of conditions or characteristics. With respect to any examples or hints given herein, any typical values stated herein and/or any information regarding the application of the devices, Infineon Technologies hereby disclaims any and all warranties and liabilities of any kind, including without limitation, warranties of non-infringement of intellectual property rights of any third party. For further information on technology, delivery terms and conditions and prices, please contact the nearest Infineon Technologies Office (www.infineon.com).

- Due to technical requirements, components may contain dangerous substances. For information on the types in question, please contact the nearest Infineon Technologies Office.

- Infineon Technologies components may be used in life-support devices or systems only with the express written approval of Infineon Technologies, if a failure of such components can reasonably be expected to cause the failure of that life-support device or system or to affect the safety or effectiveness of that device or system. Life support devices or systems are intended to be implanted in the human body or to support and/or maintain and sustain and/or protect human life. If they fail, it is reasonable to assume that the health of the user or other persons may be endangered.

Copyright © Infineon Technologies 2012. All rights reserved.

ENERGY EFFICIENCY
MOBILITY
SECURITY

Innovative semiconductor solutions for energy efficiency, mobility and security.