CoolMOS™ Benefits

in both Hard and Soft Switching SMPS topologies

Hard and Soft Switching topologies, applications and suitable CoolMOS™ families

CoolMOS™ Series

E6	Efficiency = CP Ease of Use = C3/C6	CP / C3 / C6 / E6	CP / C3 / C6 / E6	Efficiency = CP Ease of Use = C3/C6	CFD2

SMPS Switching Topologies

Hard Switching Topologies				Soft Switching Topologies		
PFC		PWM		PWM		
PFC		Two Transistor Forward (TTF / ITTF)	Flyback / Quasi Resonant Flyback	LLC		ZVS phase shift
DCM	CCM			Half Bridge	Full Bridge	Full Bridge

Applications

Telecom		Server Telecom			Server Telecom	
Lighting / Adapter	Adapter			Adapter / LED Lighting	LED Street Lighting	
PC Power		Silver Box PFC	Silver Box 80+		Silver Box 90+	
Adapter				Notebook Adapter		
SMPS						UPS
Consumer				LCD TV		

Examples of Hard and Soft Switching topologies

Hard Switching: Power Factor Correction Circuit

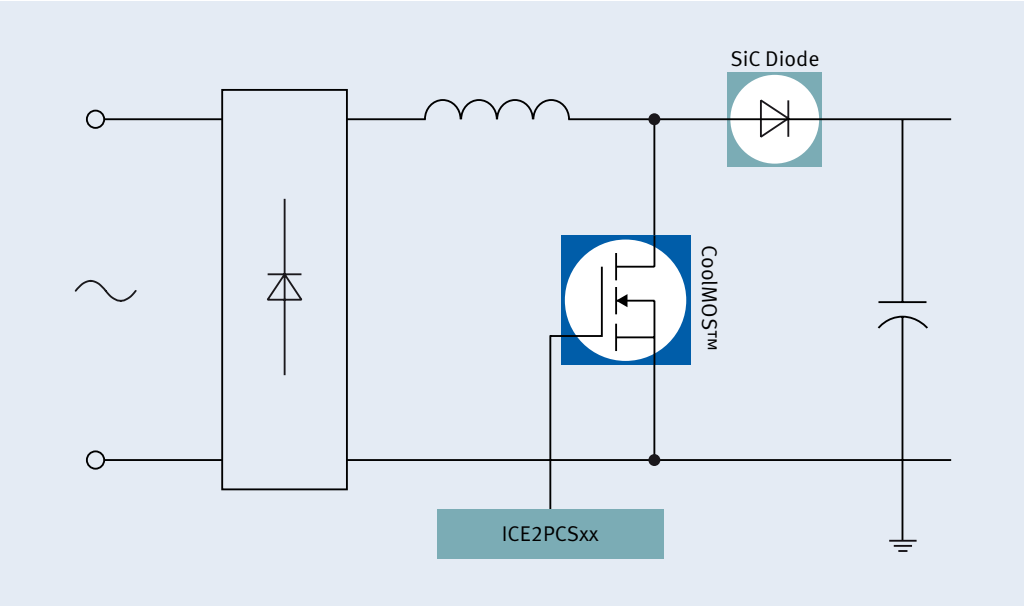

Soft Switching: ZVS Phase Shift Full Bridge

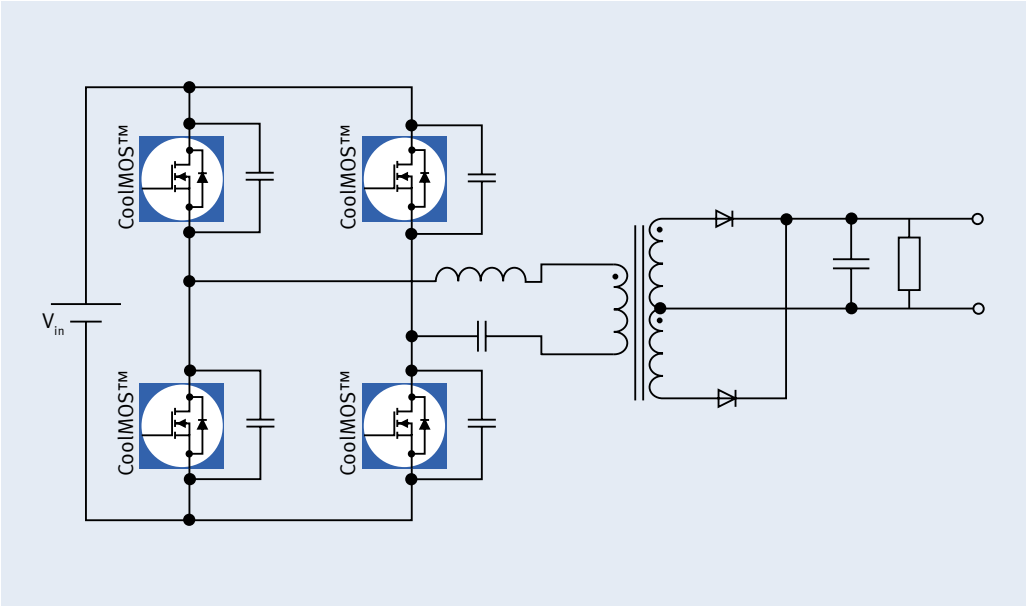

Hard Switching: Quasi-resonant Flyback Circuit

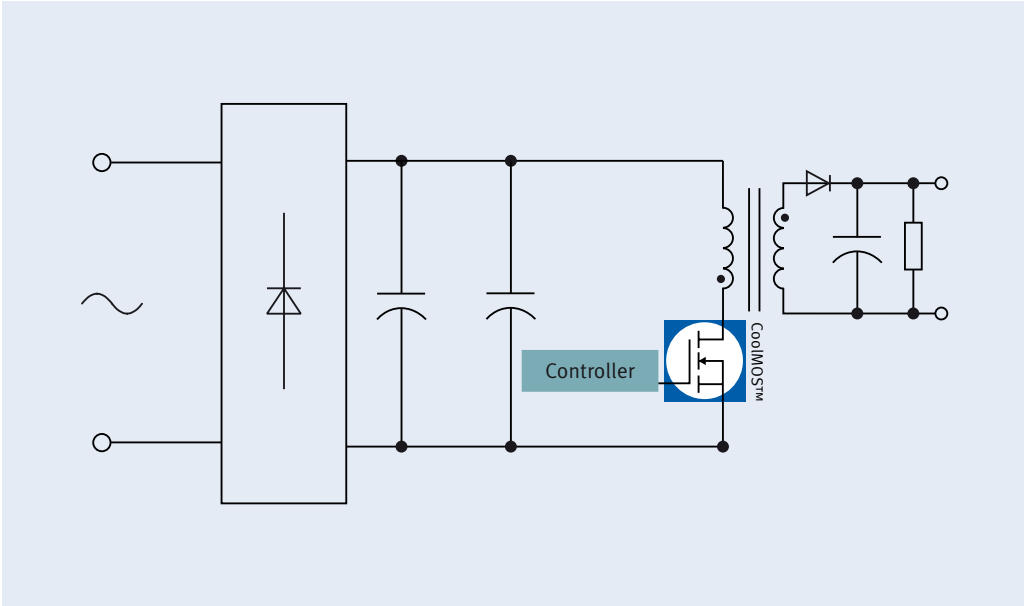

Soft Switching: LLC Half Bridge

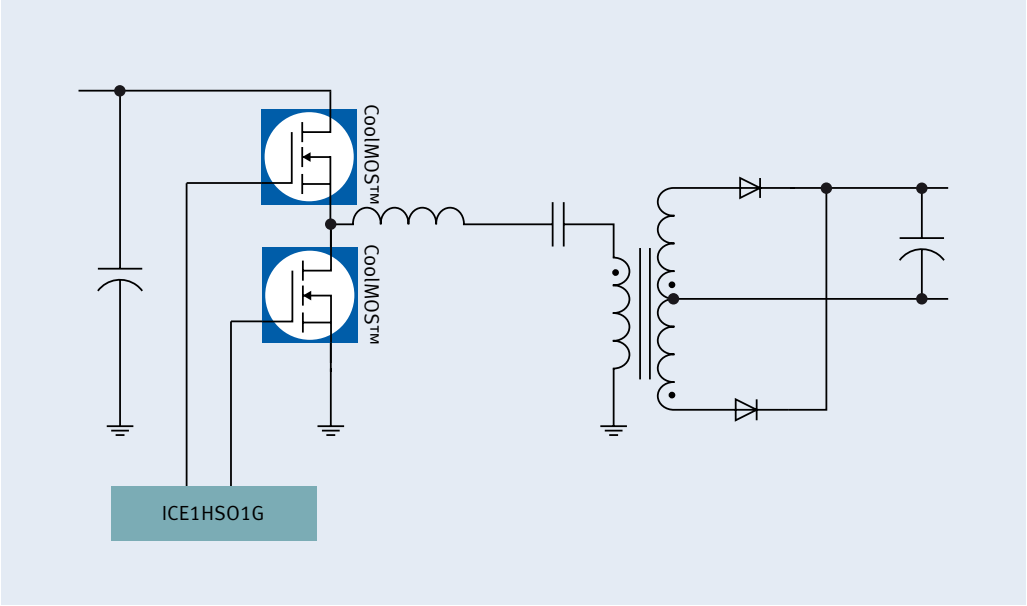

Order Number: B152-H9621-G1-X-7600-DB2011-0025
Date: 11/2011

All rights reserved. © 2011 Infineon Technologies AG

Hard Switching

What is Hard Switching?

- Hard Switching occurs when there is an overlap between voltage and current when switching the transistor on and off.
- This overlap causes energy loss which can be minimized by increasing the di/dt and dv/dt.
- However, fast changing di/dt or dv/dt causes EMI to be generated. Therefore the di/dt and dv/dt should be optimized to avoid EMI issues.

Hard Switching "MOSFET" current and voltage waveform

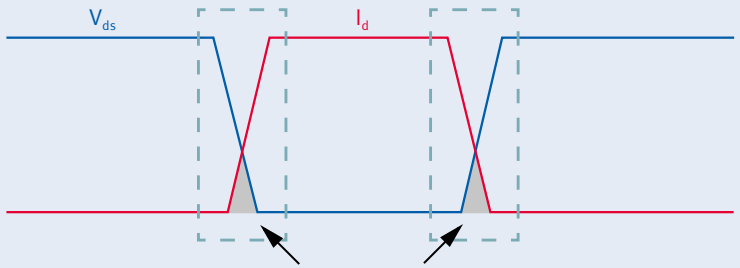

Switching losses area (reduced efficiency)

To minimize the EMI effects and to improve efficiency, an improved Hard Switching technique called Quasi-resonant Switching was developed (mainly seen in flyback converters).

Real Hard switched waveform (V_{ds}) (CCM PFC)

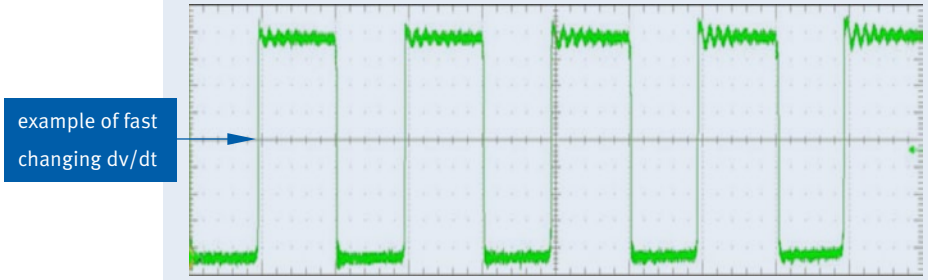

What is Quasi-resonant (valley) Switching?

- The transistor is turned on when the voltage across drain and source is at a minimum (in a valley) in order to minimize the switching losses and to improve efficiency.
- Switching the transistor when the voltage is at a minimum helps reduce the Hard Switching effect which causes EMI.
- Switching when a valley is detected – rather than at a fixed frequency – introduces frequency jitter. This has the benefit of spreading the RF emissions spectrum and reducing EMI overall.

Real Quasi-resonant (valley) Switching waveform (V_{ds}) (QR flyback converter)

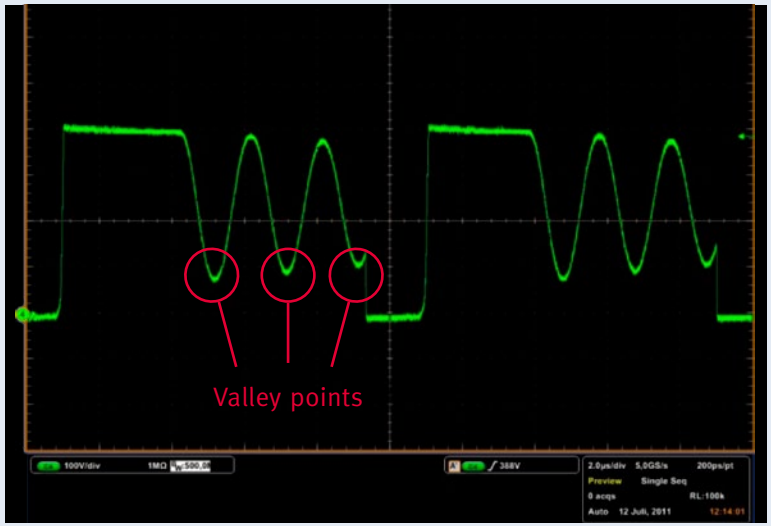

In order to minimize the switching losses, the turn on must be done in the V_{ds} "valleys"

Infineon CoolMOS™ Series recommendations for Hard Switching Topologies

- For Hard Switching applications Infineon recommends CoolMOS™ CP, C6/E6 or C3 series.

Soft Switching (Resonant)

What is Soft (resonant) Switching?

- Soft Switching brings one electrical parameter to zero (current or voltage) before the switch is turned on or off. This has benefits in terms of losses.
- The smooth resonant switching waveforms also minimize EMI.
- Common topologies like Phase Shifted ZVS and LLC are soft switched only at turn on.

What is the difference between Zero Voltage Switching (ZVS) and Zero Current Switching (ZCS)?

- As both names imply either voltage or current within the transistor is zero before switching occurs.
  - For ZVS, the transistor will be turned on at zero V_{ds} voltage to reduce the turn on switching loss.
  - For ZCS, the transistor will be turned off at zero I_d current to reduce the turn off switching loss.

Why is there a need for a Rugged or Fast Body Diode?

- Most resonant circuits are half or full bridge topologies (2 or 4 transistors). As transistors are switched on and off, energy can be left in the transistor and this can cause failure. Due to switching times if this only happens occasionally a Rugged Body Diode is sufficient (C6/E6 series). If due to fast transition times it happens continually then a Fast Body Diode is required to make sure all the energy will leave the transistor (CFD2 series).

Infineon CoolMOS™ Series recommendations for Soft Switching (Resonant) Topologies

- For Soft Switching applications Infineon recommends either CoolMOS™ CFD2 or C6/E6 series.

Soft Switching “MOSFET” current and voltage waveform

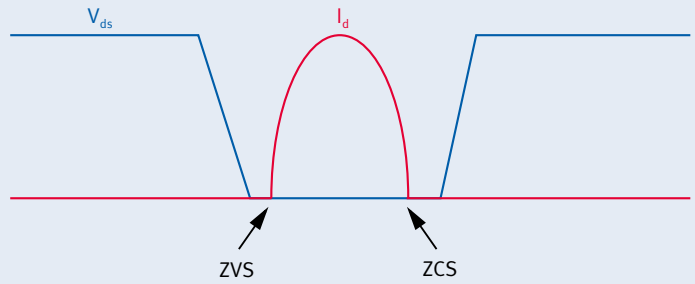

Simulated phase shift ZVS Soft Switching voltage and current waveforms

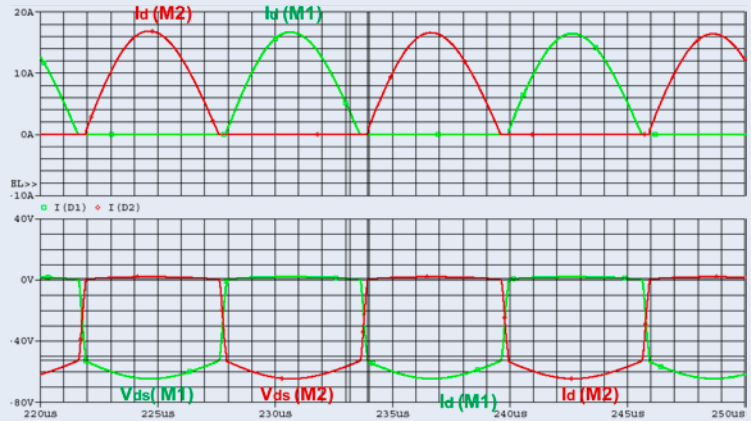

Waveforms show 2 of the MOSFETs in Full Bridge configuration

MOSFET with integrated Fast Body Diode

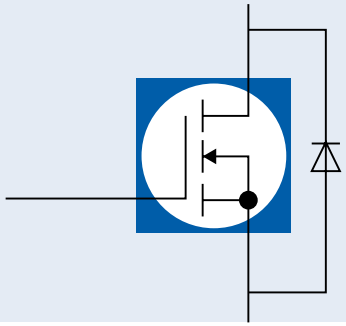

CoolMOS™ Products

	ThinPAK	TO-252 DPAK	TO-263 D²PAK	TO-220	TO-220 FullPAK	TO-251 IPAK	TO-251 IPAK SL	TO-262 I²PAK	TO-247	TO-247 plus
										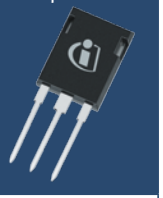
500V C3		✓	✓	✓	✓			✓	✓	
500V CP		✓	✓	✓	✓		✓	✓	✓	
600V C3		✓	✓	✓	✓	✓	✓	✓	✓	
600V CP	✓	✓	✓	✓	✓			✓	✓	
600V C6/E6		✓	✓	✓	✓			✓	✓	
600V CFD				✓	✓			✓	✓	
650V C3				✓	✓			✓	✓	
650V C6/E6	not yet released			✓	✓			✓	✓	
650V CFD2		✓	✓	✓	✓			✓	✓	not yet released
800V C3		✓	✓	✓	✓			✓	✓	
900V C3		✓		✓	✓			✓	✓	

Hard Switching
Hard/Soft Switching
Soft Switching
✓ Standard parts

Hard Switching	**CP:**	Fastest switching series, best suited for high efficiency at Hard Switching topologies
	C3:	Original ease of use series, suitable for Hard Switching. Slower Switching than CP so less efficient, but lower EMI.
Hard/Soft Switching	**E6:**	NEW! C3 replacement series optimized for DCM applications in PFC and PWM. Improved low load efficiency over C3.
	C6:	NEW! C3 replacement series. Improved low load efficiency, also with improved „rugged“ diode for use in cost sensitive Soft Switching topologies as well as Hard Switching.
Soft Switching	**CFD:**	Original Fast Body Diode series suitable for hard commutation resonant Soft Switching topologies.
	CFD2:	NEW! CFD replacement series. Improved low load efficiency and improved Fast Body Diode control enabling lower EMI and overshoot voltage. Suitable for hard commutation resonant Soft Switching topologies.

For more information on individual CoolMOS™ parts in the above different series, please go to www.infineon.com/coolmos