# Si1171 Data Short
# Optical Heart Rate Sensor Module

The module includes an IC with integrated photodetector and current-to-digital converter and LED drivers, along with multiple LEDs. It also supports external LEDs and photodiodes.

This optical heart rate sensor module includes I2C and SPI digital interfaces, a programmable-event interrupt output, an analog-to-digital converter, host communications processor, four integrated LED drivers, and inputs for two external photodiodes

A large internal photodiode and high-efficiency LEDs combined with the two optical ports at different distances to the sensor create a high quality signal with different skin types.

The Si1171 offers excellent performance under a wide dynamic range. The Si1171 is provided in a 28 pin LGA module and is capable of operation from 1.71 to 3.63 V over the –40 to +85 °C temperature range.

### Sample Applications

- Fitness wearables
- Smart watches
- Other wearable devices that require low power heart rate monitoring

**KEY FEATURES**

- Low power, high dynamic range sensor optimized for wrist-based PPG sensing
- Supports integration times from 9 µs to multiple seconds
- Average sensor current < 50 µA
- 24 bit ADC with over 100 dB dynamic range and built in averaging
- 2 kB FIFO interface
- 1.0 $mm^2$ Internal PD
- Support for external photodiodes
- Support for up to 4 LEDs in the module
- Low sleep current: 500 nA
- Low power consumption: Flexible duty cycle optimizes power consumption
- Short delay between samples improves ambient light rejection
- Four LED drivers,independently programmable from 1.7 to 310 mA
- I2C host communications with Interrupts
- SPI host communications with interrupts
- Supports synchronization with an accelerometer
- 3.7 mm × 7.0 mm × 1.1 mm LGA module
- Rated for operation from –40 to 85 °C

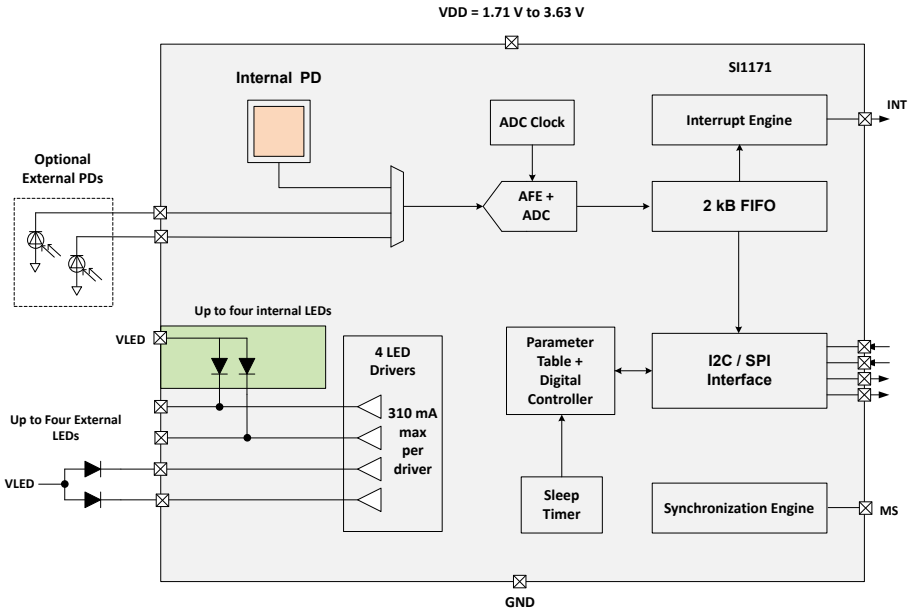

# 1. Ordering Guide

| Part Number | Package | Details |
|---|---|---|
| Si1171G2-B2-GMR | 3.7 mm × 7.0 mm × 1.1 mm LGA Module | 4 integrated LED drivers, 2 integrated green LEDs (supporting up to 310 mA current each). 2 LED drivers (up to 310 mA each) available for external LEDs. |
| Si1171E2-B2-GMR | 3.7 mm × 7.0 mm × 1.1 mm LGA Module | 4 integrated LED drivers, 2 integrated green LEDs (supporting up to 100 mA current each). 2 LED drivers (up to 310 mA each) available for external LEDs. |
| Si1171K1-B2-GMR | 3.7 mm × 7.0 mm × 1.1 mm LGA Module | 4 integrated LED drivers, 1 integrated green LED (supporting up to 310 mA), 1 integrated red LED, 1 integrated IR LED. 1 LED driver (up to 310 mA) available for external LED. |
| Si1171I3-B2-GMR | 3.7 mm × 7.0 mm × 1.1 mm LGA Module | 4 integrated LED drivers, 2 integrated green LED (supporting up to 310 mA), and 1 integrated IR LED. 1 LED driver (up to 310 mA) available for external LED. |

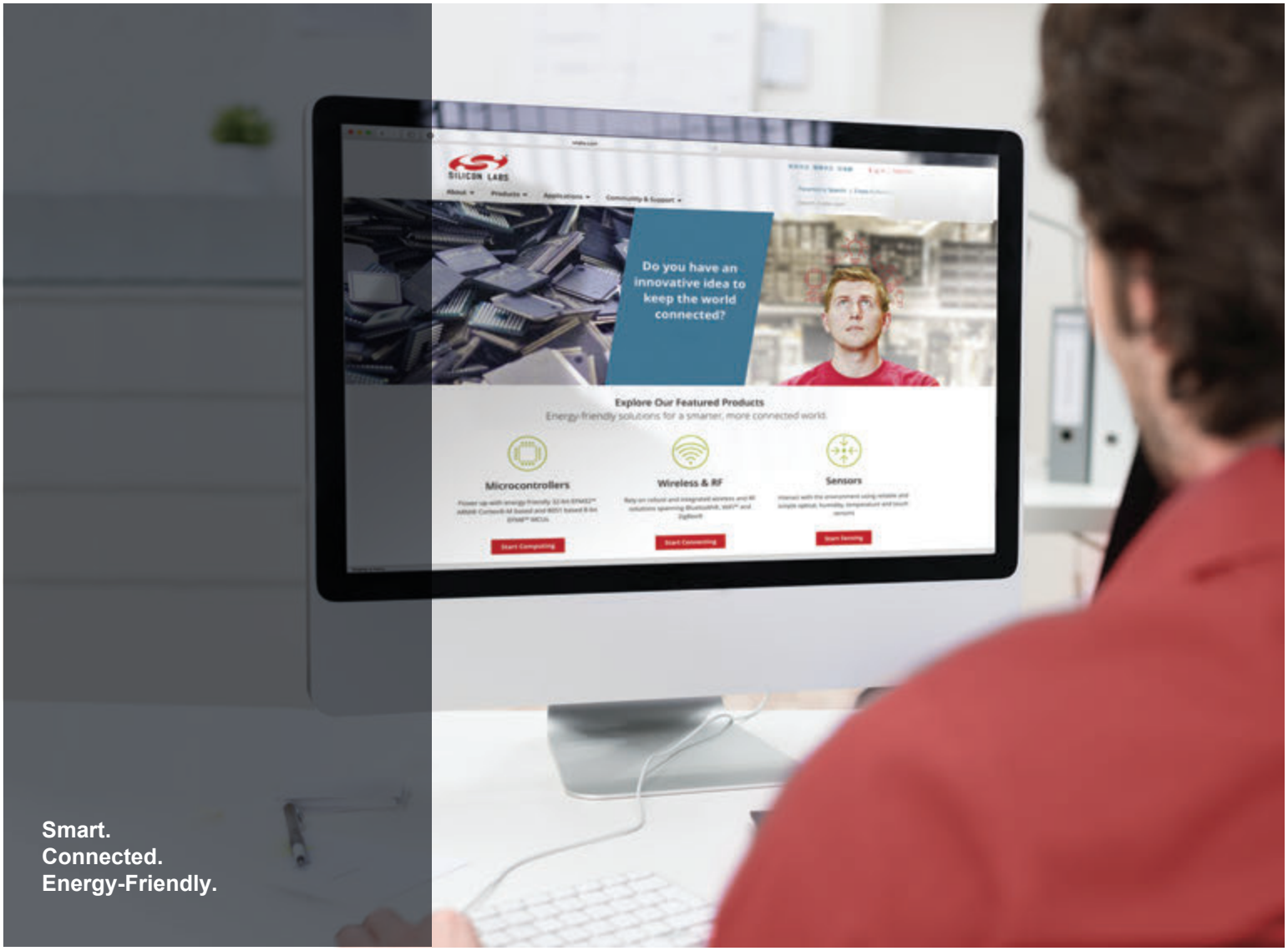


**Products**
*www.silabs.com/products*

**Quality**
*www.silabs.com/quality*

**Support and Community**
*community.silabs.com*

**Disclaimer**
Silicon Labs intends to provide customers with the latest, accurate, and in-depth documentation of all peripherals and modules available for system and software implementers using or intending to use the Silicon Labs products. Characterization data, available modules and peripherals, memory sizes and memory addresses refer to each specific device, and "Typical" parameters provided can and do vary in different applications. Application examples described herein are for illustrative purposes only. Silicon Labs reserves the right to make changes without further notice and limitation to product information, specifications, and descriptions herein, and does not give warranties as to the accuracy or completeness of the included information. Silicon Labs shall have no liability for the consequences of use of the information supplied herein. This document does not imply or express copyright licenses granted hereunder to design or fabricate any integrated circuits. The products are not designed or authorized to be used within any Life Support System without the specific written consent of Silicon Labs. A "Life Support System" is any product or system intended to support or sustain life and/or health, which, if it fails, can be reasonably expected to result in significant personal injury or death. Silicon Labs products are not designed or authorized for military applications. Silicon Labs products shall under no circumstances be used in weapons of mass destruction including (but not limited to) nuclear, biological or chemical weapons, or missiles capable of delivering such weapons.

**Trademark Information**
Silicon Laboratories Inc.® , Silicon Laboratories®, Silicon Labs®, SiLabs® and the Silicon Labs logo®, Bluegiga®, Bluegiga Logo®, Clockbuilder®, CMEMS®, DSPLL®, EFM®, EFM32®, EFR, Ember®, Energy Micro, Energy Micro logo and combinations thereof, "the world's most energy friendly microcontrollers", Ember®, EZLink®, EZRadio®, EZRadioPRO®, Gecko®, ISOmodem®, Micrium, Precision32®, ProSLIC®, Simplicity Studio®, SiPHY®, Telegesis, the Telegesis Logo®, USBXpress®, Zentri and others are trademarks or registered trademarks of Silicon Labs. ARM, CORTEX, Cortex-M3 and THUMB are trademarks or registered trademarks of ARM Holdings. Keil is a registered trademark of ARM Limited. All other products or brand names mentioned herein are trademarks of their respective holders.

SILICON LABS

**Silicon Laboratories Inc.**
**400 West Cesar Chavez**
**Austin, TX 78701**
**USA**

**http://www.silabs.com**