SILICON LABS

Take off with Simplified USB Type-C Development

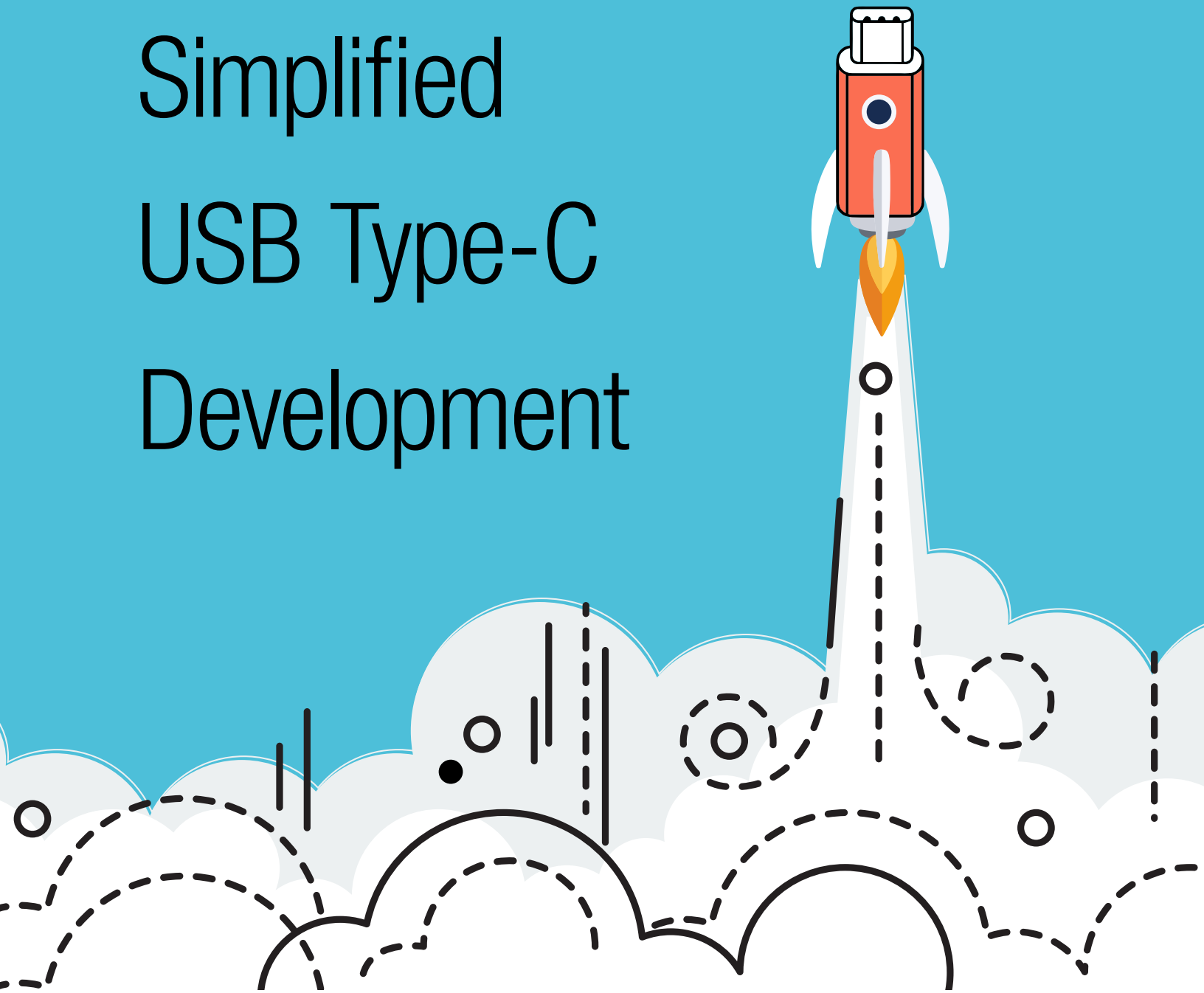

Take off with Simplified USB Type-C Development

Table of Contents

Introduction 2
What is USB Type-C? 2
USB Type-C Cables and Adapters 5
USB Type-C Adapter with Alternate Mode 6
USB Type-C Docking Station or Hub 8
USB Type-C Reference Designs 8
Conclusion 9
About the Authors 10

Introduction

USB Type-C™ is the latest USB connection standard from the USB Implementers Forum (USB-IF). The standard was first released in 2014, and is part of the USB 3.1 standard. USB Type-C is an update to the existing USB standards and is the first to implement the new connector for the USB standard going forward.

USB Type-C represents the next step in USB technology for the computing and consumer electronics industry, featuring higher data speeds (up to 10 Gbps), better power delivery (up to 100 W), greater flexibility and smaller form factors than previous generations of USB connectors. With these expanded capabilities, end users can charge device batteries, stream audio and video, and transfer data using a single universal, "all-in-one" cable instead of a confusing array of legacy cables. USB Type-C also accommodates competing interface specifications through "Alternate Modes."

With the new connector standard, the resulting ultra-slim plugs can be inserted into receptacle slots with either side up as their connection pins are on both "sides" of the plug, as shown in figures below. This is a very meaningful advance over other standards and renders many of the cables in users' drawers obsolete. Users will not have to dig through their "cable drawer" to find the right cable for a hard drive or camera to connect to a PC. USB Type-C handles high-speed data, video, and large amounts of power for device charging and power supplies.

For these reasons, USB Type-C is poised to become the connector standard of choice for mobile devices, PCs, docking stations, monitors and other consumer electronics products, with an estimated two billion USB Type-C-enabled devices deployed by 2019, according to IHS.

However, USB Type-C's versatility comes at a cost: USB's once-simple inner workings have been replaced by more complex embedded components. A seemingly straightforward cable can now be quite difficult to design because of the required USB Type-C functionality.

Two main complications arise when developing Type-C solutions.

- The first is handling the wide range of power the new interface can provide. When two devices are connected, the power delivery protocol (PD protocol) is initiated. The PD protocol involves a negotiation to determine the amount of power delivered, and which device will be the provider or consumer of that power. Since this communication requires detecting, reading, and processing analog and digital signals, MCU functionality via an embedded MCU within the host port, cable, or dongle is required.
- The second is avoiding communication failures that can occur due to the increase in supported communication standards. Failures can occur when devices or hosts do not support each other and cannot establish communication. These failures are detected and then communicated to the host and require further MCU functionality.

We explore USB Type-C further below, including some of the standard's nuances, and how to implement it most efficiently.

USB Type-C offers new features and functionality that will make it the connector standard of choice for consumer electronics products, shipping an estimated two billion devices by 2019, according to IHS.

USB Type-C Basics

USB ports and cables currently include Micro, Mini, Type-A, Type-B, and others. This causes confusion since a mobile phone has a different port than a laptop, which has a different port than a digital camera, and so on. USB Type-C consolidates these connections into one standard, covering most devices and increasing usability. Almost all accessories, including monitors, headphones, chargers, and keyboards will be able to use USB Type-C to communicate with computers, tablets, smart phones, etc.

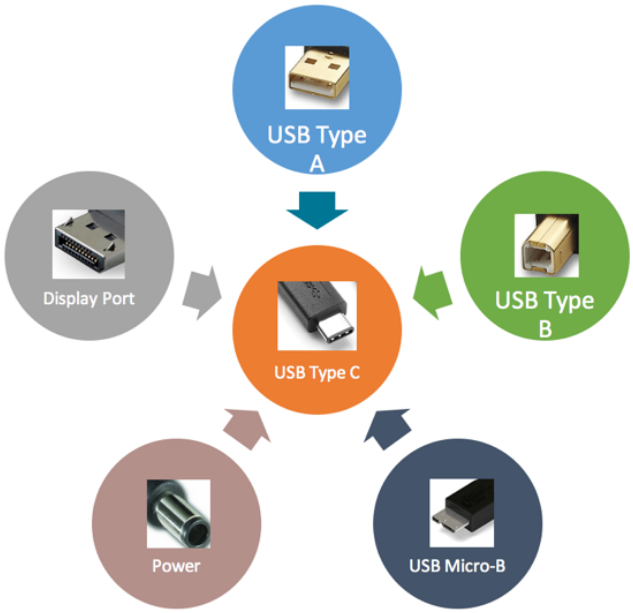

A USB Type-C receptacle port conforms other connections to one standard.

USB Type-C port and cable layouts are shown below. Because of the symmetrical design of the signals in the receptacle port, the connector can be flipped either up or down when inserting it into the receptacle. The USB 3.1 SuperSpeed TX/RX, V_{BUS}, GND, and all the other pins are connected correctly regardless of the orientation.

A1	A2	A3	A4	A5	A6	A7	A8	A9	A10	A11	A12
GND	TX1+	TX1−	VBUS	CC1	D+	D−	SBU1	VBUS	RX2−	RX2+	GND
GND	RX1+	RX1−	VBUS	SBU2	D−	D+	CC2	VBUS	TX2−	TX2+	GND
B12	B11	B10	B9	B8	B7	B6	B5	B4	B3	B2	B1

USB Type-C receptacle port pinout

A12	A11	A10	A9	A8	A7	A6	A5	A4	A3	A2	A1
GND	RX2+	RX2−	VBUS	SBU1	D−	D+	CC	VBUS	TX1−	TX1+	GND
GND	TX2+	TX2−	VBUS	VCONN			SBU2	VBUS	RX1−	RX1+	GND
B1	B2	B3	B4	B5	B6	B7	B8	B9	B10	B11	B12

USB Type-C plug pinout

Vocabulary

When talking about USB Type-C, it's helpful to distinguish between the device, the host, the power supplier (source), and the power receiver (sink). Unlike former versions of the standard, the host is not always the power source in USB Type-C and therefore the terms "host" and "source" cannot be used interchangeably.

Host ports do, however, initiate all communication, and all devices respond. Typically, the host is the downstream facing port (DFP), and the device is the upstream facing port (UFP).

If two hosts are connected, they can act as a dual role port – or DRP – to switch between acting as a host and a device.

Terminology example: A keyboard is connected to a Laptop—the keyboard (device) is the UFP and sink; the laptop (host) is the DFP and source.

Power Delivery (PD)

USB Type-C has increased power capability up to 100W to charge a high-current device, but that creates issues for devices that don't require that much power. To manage this complexity, USB Type-C provides a Power Delivery protocol (PD). PD ensures the appropriate range of power is delivered from any source to any connected sinks.

The agreement between connected devices regarding power delivery takes place through a series of resistors acting as voltage dividers on configuration channel (CC) wires when a Type-C plug is inserted into the receptacle. Since the CC line in the plug is either connected to CC1 or CC2 in the receptacle (see pinouts above), the receptacle determines the orientation of the plug by measuring the voltages on both CC1 and CC2 lines. The different values of the pull-up resistors communicate the amount of current the source is capable of supplying, and also establishes who will be the UFP and the DFP.

The power sink does not indicate how much current it sinks through different pull-down resistor values; it must dynamically adapt its load to match the maximum current available from the provider.

To read the voltage divider correctly, both the host and the device need an analog processing unit, usually in the form of an accurate ADC within an MCU. The ADC measures the voltage on the CC line continuously to monitor the connection between the plug and the receptacle.

The MCU is known as the PD controller, and handles the complete physical layer and upper layer protocol. It negotiates the power being delivered or received. For simple Type-C applications, the power negotiation stops with the resistors. However, for a more adaptable design, the devices can agree on a different setup by communicating over the CC line.

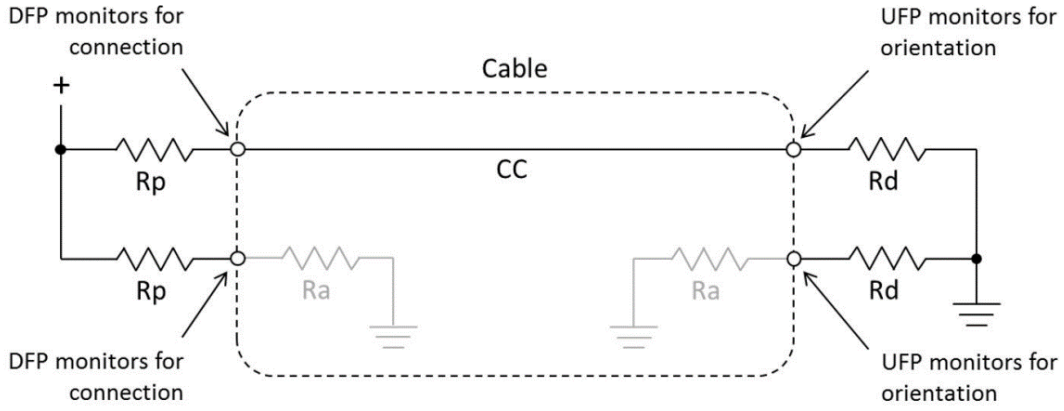

USB Type-C channel line topology (Rp=pull-up resistor, Rd=pull-down resistor, Ra=attach resistor)

Once the plug orientation and initial power are established, the devices use the CC line to communicate with each other. Through this, the devices can agree on different levels of power and designate the sink or source, allowing for real-time power delivery adaptation. CC line communication is also used to announce which type of communication will be used.

USB Type-C can communicate on the high-speed lines, USB 2.0, and others. The devices announce which of these lines can be used via the CC line. However, not all devices support all communication protocols.

Notification of Failure

When two connected devices do not support compatible protocols, failure occurs. For instance, if a monitor, that only receives video from a host, is connected to a host doesn't support or supply video data a failure would occur. If this happens, the host will remain unaware of the failure because communication cannot be established.

To avoid these failure modes presenting a poor user experience, the USB Type-C standard demands an embedded device on the monitor or device side to act as a failsafe known as a Billboard device. The Billboard device signals to the host through that communication cannot be established. The host can then notify the user that the two devices are incompatible. An example is shown below. Billboard devices are typically an MCU, which may be the same as the PD controller.

Example of a USB Type-C Billboard device failure notification

Cables and Adapters for USB Type-C

Older peripherals that do not support USB Type-C need to use converting cables or dongles. For example, when connecting USB 2.0 to USB Type-C, USB 2.0 does not support higher speeds and does not require more than 5V Vor 3A on V_{BUS}, and the cable must route the differential pair D+/D-, V_{BUS}, and GND to the connectors.

Developing a Type-C to Type-C cable, a dongle that converts USB 3.0/1 to Type-C, or one that requires more than 5V or 3A on V_{BUS} is more difficult.

In these cases, the dongle becomes part of the power negotiation between the two devices, requiring the cable or dongle to have an embedded PD controller. The PD controller is initially powered through V_{BUS} set at 5V or the V_{CONN} line. It then negotiates with the host to set an agreed power level on the V_{BUS} line.

The figure below shows an electronically marked cable assembly, or EMCA example, for connecting two Type-C devices together. The PD controller can be powered by V_{CONN} 1 or V_{CONN} 2. The EMCA will advertise its max power capabilities on the CC line, and the source will adapt to suit.

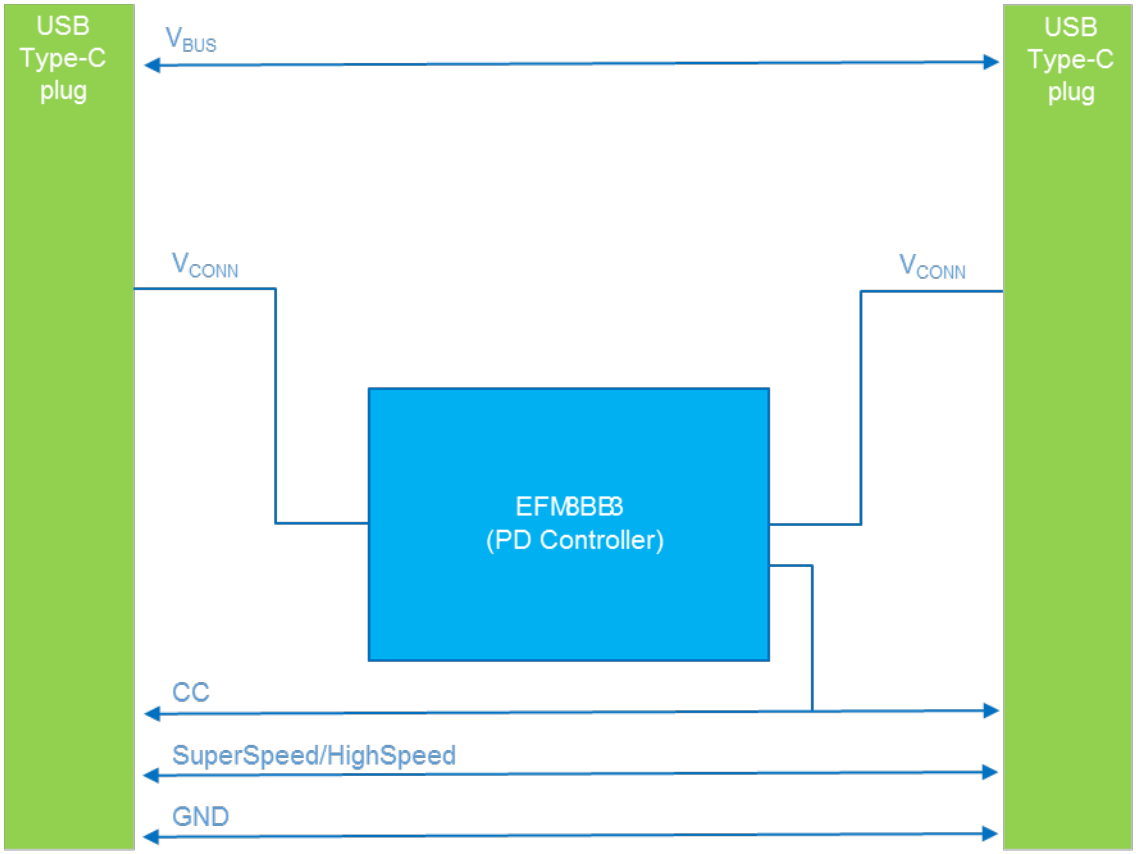

USB Type-C to Type-C cable

USB Type-C Adapter with Alternate Mode

Alternate Mode is the functional extension of the Type-C interface that allows Display Port, PCIe, or other communication protocols to use the USB 3.1 SuperSpeed lines. The Alternate Mode is entered when the adapter is connected to a compatible host.

A dongle that supports Alternate Mode requires extra precautions and embedded devices. The dongle must inform the host if it was not able to enter the Alternate Mode to avoid a silent failure. It does this through the Billboard device, which is required functionality of USB Type-C PD standard for accessories.

The block diagram below shows a cable that converts a legacy video port into USB Type-C. If the Type-C device does not support the legacy video format, the Billboard device will be informed by the PD controller, and will, in turn, inform the Type-C device of the failure.

Example USB Type-C adapter cable

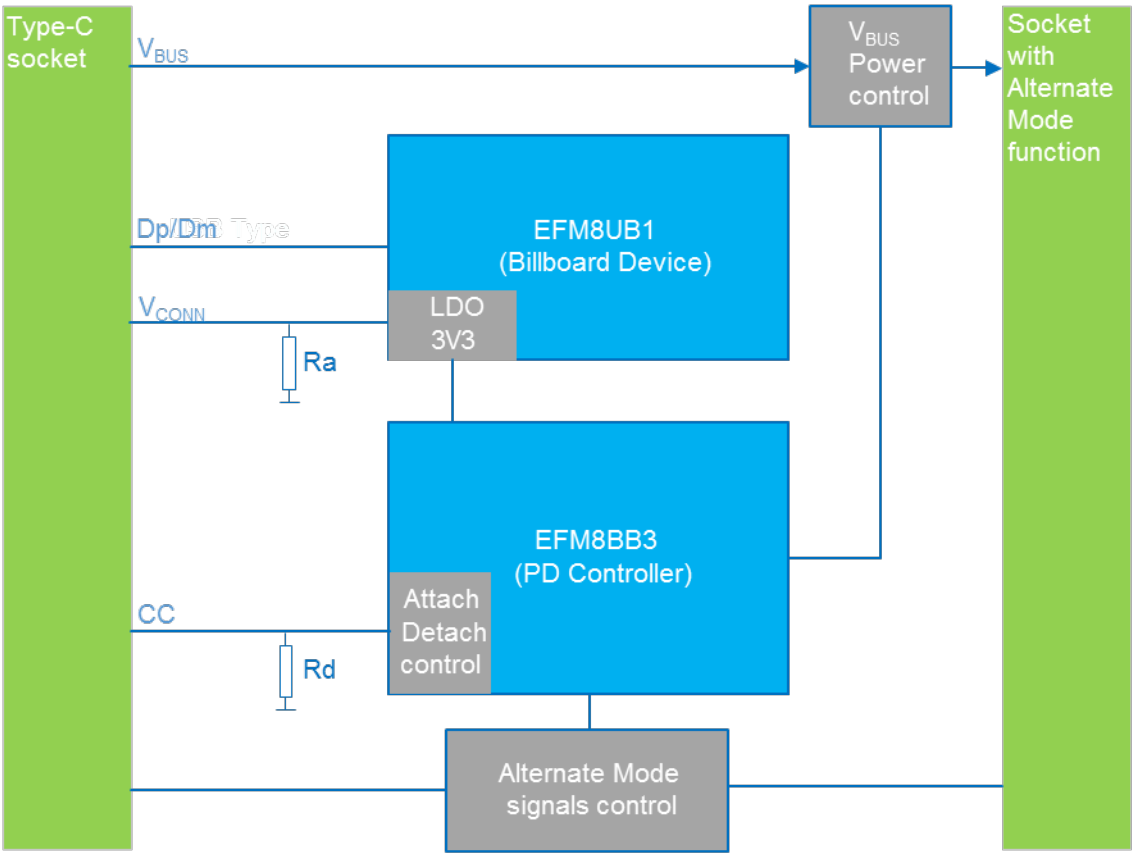

USB Type-C Alternate Mode adaptor cable

USB Type-C Docking Station or Hub

A more complex example than display/Type-C to Type-C is a docking station or hub, which must support charging many devices. The hub can be a combination of multiple Type-C or Type-A ports, HDMI, PCIe, etc. This hub requires multiple embedded devices to successfully support connected devices. Each port, depending on what device is connected, will need different amounts of power. To account for this, each port may need a PD device.

Any video ports, such as display, VGA, or HDMI, will need a Billboard device. Additionally, the hub needs a device to control traffic to the host. This remains largely unchanged from the Type-A hubs to prevent collisions on the lines and ensure that only one device is communicating to the host at one time. It is clear that the previously simple hub now requires a more complex and demanding design.

Example multiple connector USB Type-C hub and cable

USB Type-C Reference Designs

While implementing USB Type-C is more complex, the added design complexity does not need to fall solely on developers. Silicon Labs provides PD MCUs with embedded PD functionality, USB-IF certified reference designs, example code, and Billboard and Alternate Mode source code, for dongles, docking stations, and device ports. Using these tools, customers can greatly reduce USB Type-C development time and efforts.

The Silicon Labs USB Type-C reference design is USB Type-C and Power Delivery (PD) certified by the USB-IF and offers a quick start for developers.

The reference board below provides two PD controllers—one for each port—and a Billboard device with Alternate Mode functionality to accompany the DisplayPort. The reference design handles switching to Alternate Mode, charging, informing the host of failures, and ensuring correct power delivery to the display port and host.

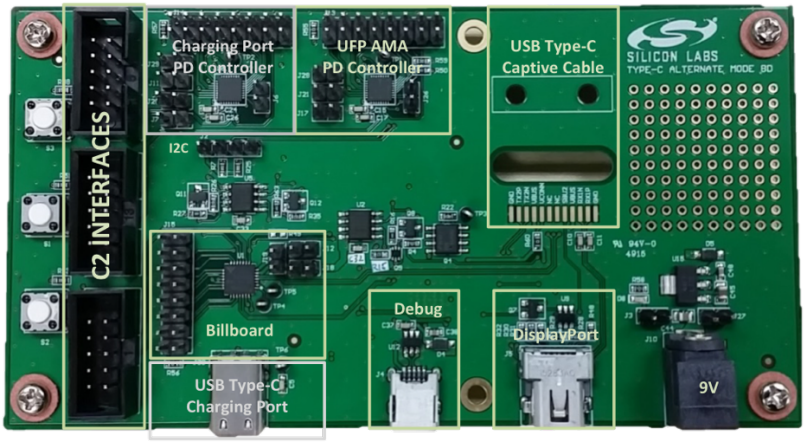

Silicon Labs USB Type-C certified reference design

The reference design uses the Silicon Labs Busy Bee 3 (EFM8BB31F64G-QFN32) to simplify Type-C design with PD functionality in a single chip as small as 3x3 mm2 with precision oscillator and hardware PD PHY layer, providing customers a low bill of materials, cost efficient PD solution.

Get to market faster with the Silicon Labs USB Type-C reference design.

Conclusion

USB Type-C is the standard of the future. Going forward, choosing a cable will involve deciding whether the end is a plug or receptacle. There are already smart phones, tablets, and laptops on the market that have only USB Type-C ports, and these devices are only the beginning.

That said, USB Type-C requires embedded devices and firmware to handle its increased functionality, putting a strain on developers and manufacturers as they migrate their devices. Silicon Labs has certified reference designs, example code, libraries, firmware, and support teams dedicated to simplifying USB Type-C requirements for a wide array of applications.

For more information on USB Type-C, and Silicon Labs' reference design, visit silabs.com/usb-type-c.

About the Authors

Mark Beecham is a recent Graduate of Texas A&M university with a Bachelor of Science in electrical engineering. He is a product marketing engineer at Silicon Labs working on USB Type-C solutions.

Kafai Leung is the Senior Product Manager for Silicon Labs' MCU products. She is also responsible for defining the company's USB Type-C strategy. Previously, she was the design director of our Singapore Design Center and her teams developed many 8-bit and 32-bit MCU products.