high performance needs great design.

Datasheet: AS5162 12-Bit Magnetic Angle Position Sensor

Please be patient while we update our brand image as austriamicrosystems and TAOS are now ams.

AS5162

12-Bit Magnetic Angle Position Sensor

1 General Description

The AS5162 is a contactless magnetic angle position sensor for accurate angular measurement over a full turn of 360°. A sub range can be programmed to achieve the best resolution for the application. It is a system-on-chip, combining integrated Hall elements, analog front end, digital signal processing and best in class automotive protection features in a single device.

To measure the angle, only a simple two-pole magnet, rotating over the center of the chip, is required. The magnet may be placed above or below the IC.

The absolute angle measurement provides instant indication of the magnet's angular position with a resolution of 0.022° = 16384 positions per revolution. According to this resolution the adjustment of the application specific mechanical positions are possible. The angular output data is available over a 12 bit ratiometric analog output.

The AS5162 operates at a supply voltage of 5V and the supply and output pins are protected against overvoltage up to +20V. In addition the supply pins are protected against reverse polarity up to –20V.

Figure 1. Typical Arrangement of AS5162 *and magnet*

2 Key Features

- 360º contactless high resolution angular position sensing
- User programmable start and end point of the application region + linearization.
- User programmable clamping levels and programming of the transition point.
- Powerful analog output
  - Short circuit monitor
  - High driving capability for resistive and capacitive loads
- Wide temperature range: - 40°C to + 150°C
- Small Pb-free package: SOIC 8.
- Broken GND and VDD detection over a wide range of different load conditions.
- Saw tooth mode 1,2,3,4 slopes per revolution

3 Benefits

- Unique fully differential patented solution
- Best protections for automotive applications
- Easy to program
- Additional linearization points for output characteristic
- Ideal for applications in harsh environments due to contactless position sensing
- Robust system, tolerant to magnet misalignment, air gap variations, temperature variations and external magnetic fields
- High inherent accuracy
- High driving capability of analog output (including diagnostics)
- Broken GND and VDD detection for all external load cases

4 Applications

The AS5162 is ideal for automotive applications like throttle and valve position sensing, gearbox position sensor, tumble flap, chassis height level, pedal position sensing and contactless potentiometers.

Figure 2. AS5162 Block Diagram

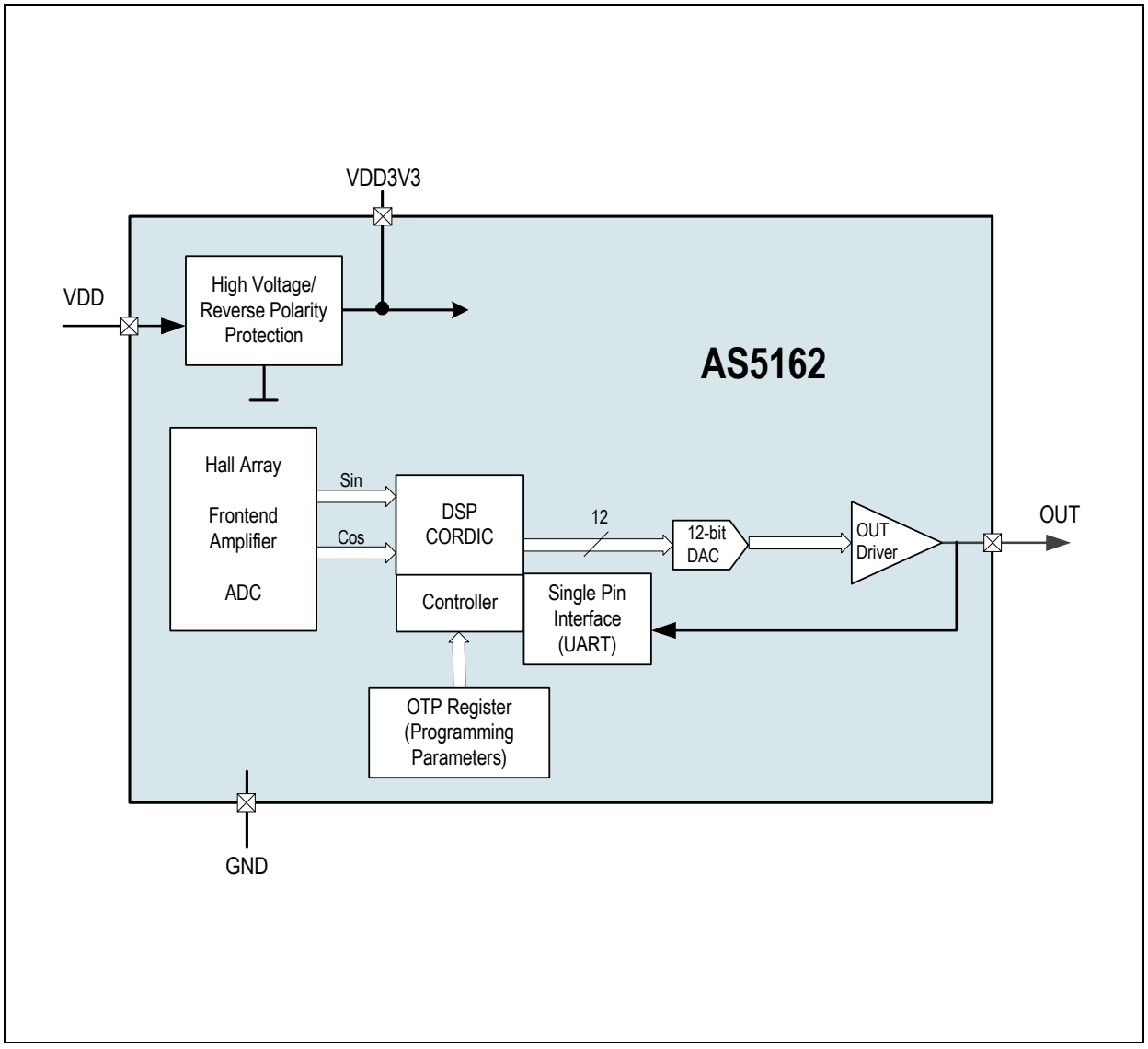

Contents

1 General Description 1
2 Key Features 1
3 Benefits 1
4 Applications 1
5 Pin Assignments 4
5.1 Pin Descriptions 4
6 Absolute Maximum Ratings 5
7 Electrical Characteristics 6
7.1 Operating Conditions 6
7.2 Magnetic Input Specification 6
7.3 Electrical System Specifications 7
7.4 Timing Characteristics 8
7.5 Power Management - Supply Monitor 8
8 Detailed Description 9
8.1 Operation 9
8.1.1 VDD Voltage Monitor 9
8.2 Analog Output 9
8.2.1 Programming Parameters 10
8.2.2 Application Specific Angular Range Programming 10
8.2.3 Application Specific Programming of the Break Point 11
8.2.4 Full Scale Mode 11
8.2.5 Multiple Slope Output 12
8.2.6 Linearization of the Output 13
8.2.7 Resolution of Parameters 13
8.2.8 Analog Output Diagnostic Mode 15
8.2.9 Analog Output Driver Parameters 15
8.2.10 Noise Suppressor 16
8.2.11 Hysteresis Function 16
9 Application Information 16
9.1 Recommended Application Schematic 16
9.2 Programming the AS5162 18
9.2.1 UART Interface for Programming 18
9.2.2 Frame Organization 18
9.2.3 WRITE (Command Description) 20
9.2.4 READ (Command Description) 21
9.2.5 Baud-rate Automatic Detection 21
9.2.6 Baud-rate Manual Setting (optional) 21
9.3 OTP Programming Data 23
9.4 READ / WRITE Register Map 27
9.5 READ Only Register Map 28
9.6 Special Registers 30
9.7 Programming Procedure 31
10 Package Drawings and Markings 32
11 Ordering Information 35

5 Pin Assignments

Figure 3. SOIC-8 Pin Configuration

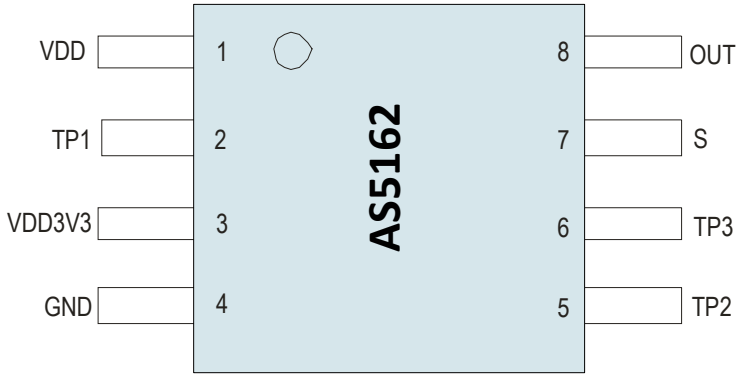

5.1 Pin Descriptions

Table 1. SOIC-8 Pin Descriptions

Pin Number	Pin Name	Pin Type	Description
1	VDD	Supply pin	**Positive supply pin.** This pin is over voltage protected.
2	TP1	DIO/AIO multi purpose pin	**Test pin for fabrication.** Connected to ground in the application board.
3	VDD3V3	AIO	Output of the internal voltage regulator
4	GND	Supply pin	**Ground pin.** Connected to ground in the application.
5	TP2	DIO/AIO multi purpose pin	**Test pin for fabrication.** Connected to ground in the application board.
6	TP3	DIO/AIO multi purpose pin	**Test pin for fabrication.** Open in the application.
7	S	AIO	**Test pin for fabrication.** Connected to OUT in the application board.
8	OUT	DIO/AIO multi purpose pin	**Output pin analog output.** Over this pin the programming is possible.

6 Absolute Maximum Ratings

Stresses beyond those listed in Table 2 may cause permanent damage to the device. These are stress ratings only, and functional operation of the device at these or any other conditions beyond those indicated in Electrical Characteristics on page 6 is not implied. Exposure to absolute maximum rating conditions for extended periods may affect device reliability.

Table 2. Absolute Maximum Ratings

Symbol	Parameter	Min	Max	Units	Comments
Electrical Parameters					
V_{DD}	DC supply voltage at pin VDD Overvoltage	-20	20	V	No operation
V_{OUT}	Output voltage OUT	-0.3	20	V	Permanent
V_{diff}	Voltage difference at pin VDD and OUT	-20	20	V	
V_{DD3V3}	DC supply voltage at pin V_{DD3V3}	-0.3	5	V	
I_{scr}	Input current (latchup immunity)	-100	100	mA	Norm: AEC-Q100-004
Electrostatic Discharge					
ESD	Electrostatic discharge		±2	kV	Norm: AEC-Q100-002
Temperature Ranges and Storage Conditions					
T_{strg}	Storage temperature	-55	+150	ºC	Min -67ºF; Max +257ºF
T_{Body}	Body temperature		260	ºC	The reflow peak soldering temperature (body temperature) specified is in accordance with IPC/JEDEC J-STD-020 “Moisture/Reflow Sensitivity Classification for Non-Hermetic Solid State Surface Mount Devices”. The lead finish for Pb-free leaded packages is matte tin (100% Sn).
H	Humidity non-condensing	5	85	%	
MSL	Moisture Sensitive Level	3			Represents a maximum floor life time of 168h

7 Electrical Characteristics

7.1 Operating Conditions

In this specification, all the defined tolerances for external components need to be assured over the whole operation conditions range and also over lifetime.

Table 3. Operating Conditions

Symbol	Parameter	Conditions	Min	Typ	Max	Units
T_{AMB}	Ambient temperature		-40		+150	ºC
I_{supp}	Supply current				12	mA
V_{DD}	Supply voltage at pin VDD		4.5	5.0	5.5	V

7.2 Magnetic Input Specification

T_{AMB} = -40 to +150ºC, VDD = 4.5 to 5.5V (5V operation), unless otherwise noted.

Two-pole cylindrical diametrically magnetized source:

Table 4. Magnetic Input Specification

Symbol	Parameter	Conditions	Min	Typ	Max	Units
B_{pk}	Magnetic input field amplitude	Required vertical component of the magnetic field strength on the die's surface, measured along a concentric circle with a radius of 1.25 mm	30		70	mT
B_{pkext}	Magnetic input field amplitude (extended) default setting	Required vertical component of the magnetic field strength on the die's surface, measured along a concentric circle with a radius of 1.25 mm. Increased sensor output noise.	10		90	mT
B_{off}	Magnetic offset	Constant magnetic stray field			± 5	mT
	Field non-linearity	Including offset gradient			5	%
D_{isp}	Displacement radius	Offset between defined device center and magnet axis. Dependent on the selected magnet. Including Eccentricity.		1		mm

7.3 Electrical System Specifications

TAMB = -40 to +150ºC, VDD = 4.5 - 5.5V (5V operation), Magnetic Input Specification, unless otherwise noted.

Table 5. Electrical System Specifications

Symbol	Parameter	Conditions	Min	Typ	Max	Units
RES	Resolution Analog Output	Range > 90º 1LSB=1.221mV typ			12	bit
INL_{opt}	Integral non-linearity (optimum)	Best aligned reference magnet at 25ºC over full turn 360º.			0.5	deg
INL_{temp}	Integral non-linearity (optimum)	Best aligned reference magnet over temperature -40 -150º over full turn 360º.			0.9	deg
INL	Integral non-linearity	Best aligned reference magnet over temperature -40 -150º over full turn 360º and displacement			1.4	deg
DNL	Differential non-linearity	Monolitic		0.05		deg
ON	Output noise (360º segment)	1 LSB after filter peak/peak rms value		0.2		%/VDD
t_{PwrUp}	Power-up time 0-5V	See Figure 4			10	ms
t_{delay}	System propagation delay absolute output: delay of ADC, DSP and absolute interface	10kOhm, 100 µF RC filter			300	µs

Figure 4. Power-up timing Diagram

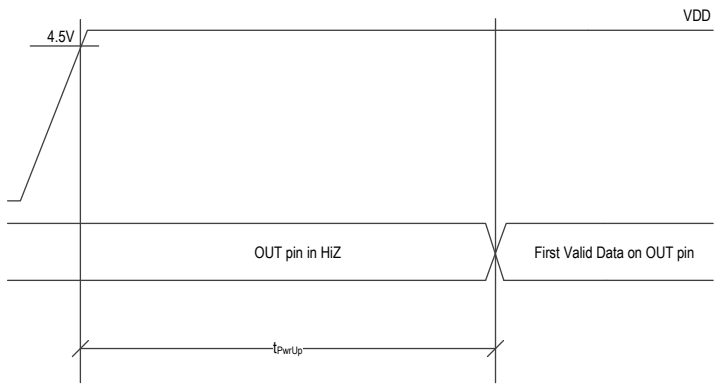

7.4 Timing Characteristics

Table 6. Timing Conditions

Symbol	Parameter	Conditions	Min	Typ	Max	Units
T_{DETWD}	WachDog error detection time				12	ms

7.5 Power Management - Supply Monitor

Table 7. Power Management - Supply Monitor Conditions

Symbol	Parameter	Conditions	Min	Typ	Max	Units
VDD_{UVTH}	VDD undervoltage upper threshold		3.5	4.0	4.5	V
VDD_{UVTL}	VDD undervoltage lower threshold		3.0	3.5	4.0	V
VDD_{UVHYS}	VDD undervoltage hysteresis		300	500	900	mV
VDD_{UVDET}	VDD undervoltage detection time		10	50	250	µs
VDD_{UVREC}	VDD undervoltage recovery time		10	50	250	µs
VDD_{OVTH}	VDD overvoltage upper threshold		6.0	6.5	7.0	V
VDD_{OVTL}	VDD overvoltage lower threshold		5.5	6	6.5	V
VDD_{OVHYS}	VDD overvoltage hysteresis		300	500	900	mV
ANA_{TOVDET}	VDD overvoltage detection time (analog path)		10	50	250	µs
ANA_{TOVREC}	VDD overvoltage recovery time (analog path)		10	50	250	µs

8 Detailed Description

The AS5162 is manufactured in a CMOS process and uses a spinning current Hall technology for sensing the magnetic field distribution across the surface of the chip.

The integrated Hall elements are placed around the center of the device and deliver a voltage representation of the magnetic field at the surface of the IC.

Through Sigma-Delta Analog / Digital Conversion and Digital Signal-Processing (DSP) algorithms, the AS5162 provides accurate high-resolution absolute angular position information. For this purpose a Coordinate Rotation Digital Computer (CORDIC) calculates the angle and the magnitude of the Hall array signals.

The DSP is also used to provide digital information at the outputs that indicate movements of the used magnet towards or away from the device's surface.

A small low cost diametrically magnetized (two-pole) standard magnet provides the angular position information.

The AS5162 senses the orientation of the magnetic field and calculates a 14-bit binary code. This code is mapped to a programmable output characteristic in analog voltage format. This signal is available at the pin (**OUT**).

The application angular region can be programmed in a user friendly way. The start angle position **T1** and the end point **T2** can be set and programmed according the mechanical range of the application with a resolution of 14 bits. In addition the **T1Y** and **T2Y** parameter can be set and programmed according the application. The transition point 0 to 360 degree can be shifted using the break point parameter **BP**. The voltage for clamping level low **CLL** and clamping level high **CLH** can be programmed with a resolution of 9 bits. Both levels are individually adjustable. Two additional linearization points can be used to improve the system linearity. These points **C1** and **C2** are programmable.

The output parameters can be programmed in an OTP register. No additional voltage is required to program the AS5162. The setting may be overwritten at any time and will be reset to default when power is cycled. To make the setting permanent, the OTP register must be programmed by using a lock bit the content could be frozen for ever.

The AS5162 is tolerant to magnet misalignment and unwanted external magnetic fields due to differential measurement technique and Hall sensor conditioning circuitry.

8.1 Operation

8.1.1 VDD Voltage Monitor

VDD Over Voltage Management. If the supply voltage at pin **VDD** exceeds the over-voltage upper threshold for longer than the detection time the output is turned off. When the over voltage event has passed and the voltage applied to pin **VDD** falls below the over-voltage lower threshold for longer than the recovery time the device enters the normal mode and the output is enabled.

VDD Under Voltage Management. When the voltage applied to the **VDD** pin falls below the under-voltage lower threshold for longer than the detection time the output is turned off. When the voltage applied to the **VDD** pin exceeds the under-voltage upper threshold for longer than the detection time the device enters the normal mode and the output is enabled.

8.2 Analog Output

By default (after programmed **CUST_LOCK** OTP bit) the analog output mode is selected. The pin **OUT** provides an analog voltage that is proportional to the angle of the rotating magnet and ratiometric to the supply voltage **VDD**. It can source or sink currents up in normal operation. A short circuit protection is in place and will switch the output driver in high Z in case of an overload event. Due to an intelligent approach a permanent short circuit will not damage the device. This is also feasible in a high voltage condition up to 20 V and at the highest specified ambient temperature.

After the digital signal processing (DSP) a 12-bit Digital-to-Analog converter and output stage provides the output signal.

The DSP maps the application range to the output characteristic. An inversion of the slope is also programmable to allow inversion of the rotation direction.

The reference voltage for the Digital-to-Analog converter (DAC) is taken from **VDD**. In this mode, the output voltage is ratiometric to the supply voltage.

An on-chip diagnostic feature handles the error state at the output. Depending on the failure the output is in HiZ condition or is driven in the failure band. (see Table 9).

8.2.1 Programming Parameters

The analog output characteristic is programmable by OTP. Depending on the application, the analog output can be adjusted. The user can program the following application specific parameters:

T1	Mechanical angle start point
T2	Mechanical angle end point
T1Y	Voltage level at the T1 position
T2Y	Voltage level at the T2 position
CLL	Clamping Level Low
CLH	Clamping Level High
BP	Break point (transition point 0 to 360º)
C1	Calibration Point 1
C2	Calibration Point 2
C1Y	Trim value for C1
C2Y	Trim value for C2

These parameters are input parameters. Using the available programming software and programmer these parameters are converted and finally written into the AS5162 128 bit OTP memory.

8.2.2 Application Specific Angular Range Programming

The application range can be selected by programming **T1** with a related **T1Y** and **T2** with a related **T2Y** into the AS5162. The clamping levels **CLL** and **CLH** can be programmed independent from the **T1** and **T2** position and both levels can be separately adjusted.

Figure 5. Programming of an Individual Application Range

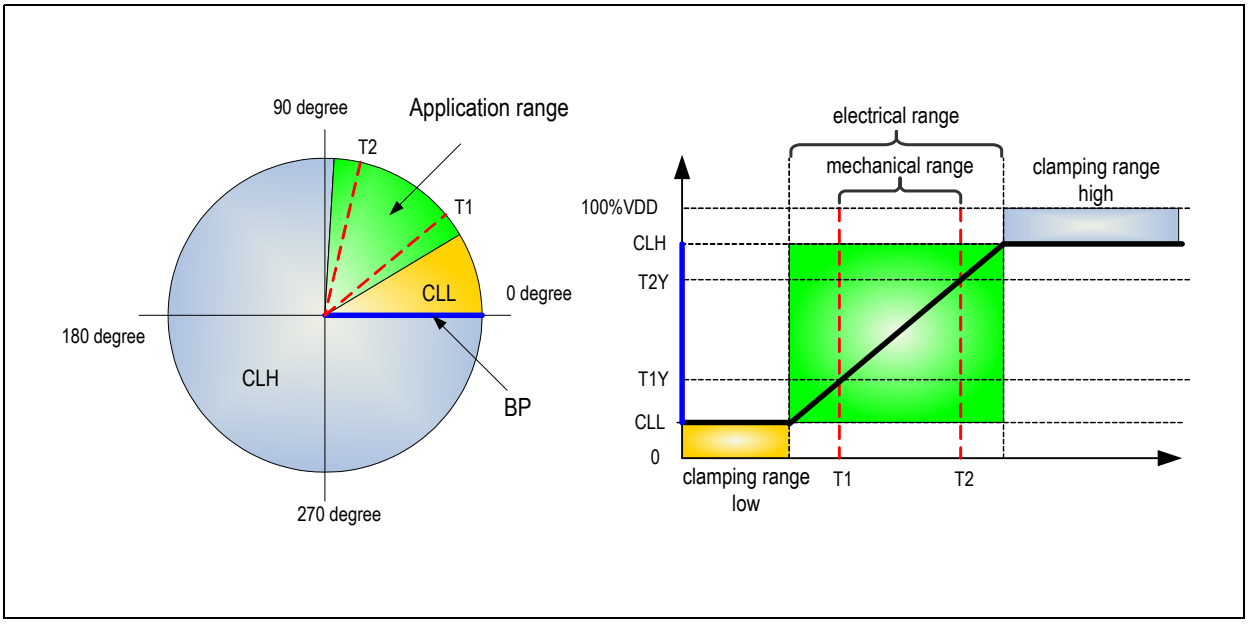

Figure 5 shows a simple example of the selection of the range. The mechanical starting point **T1** and the mechanical end point **T2** are defining the mechanical range. A sub range of the internal Cordic output range is used and mapped to the needed output characteristic. The analog output signal has 12 bit, hence the level **T1Y** and **T2Y** can be adjusted with this resolution. As a result of this level and the calculated slope the clamping region low is defined. The break point **BP** defines the transition between **CLL** and **CLH**. In this example the **BP** is set to 0 degree. The **BP** is also the end point of the clamping level high **CLH**. This range is defined by the level **CLH** and the calculated slope. Both clamping levels can be set independently form each other.

8.2.3 Application Specific Programming of the Break Point

The break point **BP** can be programmed as well with 14 bits. This is important when the default transition point is inside the application range. In such a case the default transition point must be shifted out of the application range. The parameter **BP** defines the new position.

Figure 6. Individual Programming of the Break Point BP

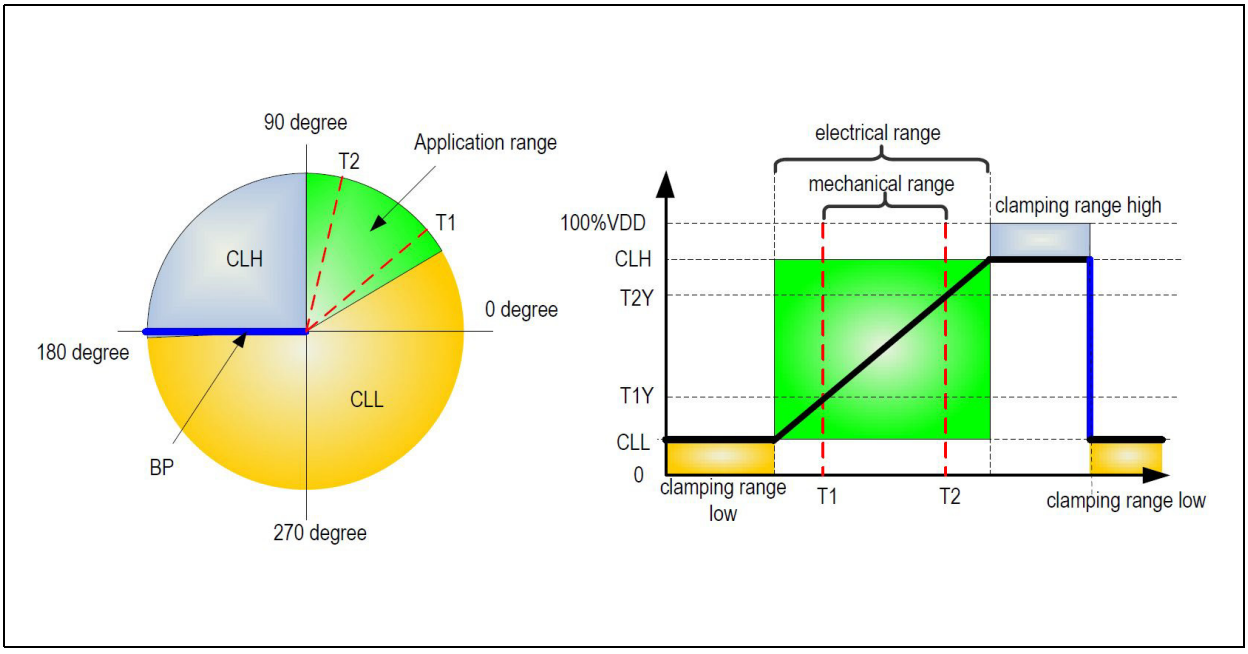

8.2.4 Full Scale Mode

Figure 7. Full Scale Mode

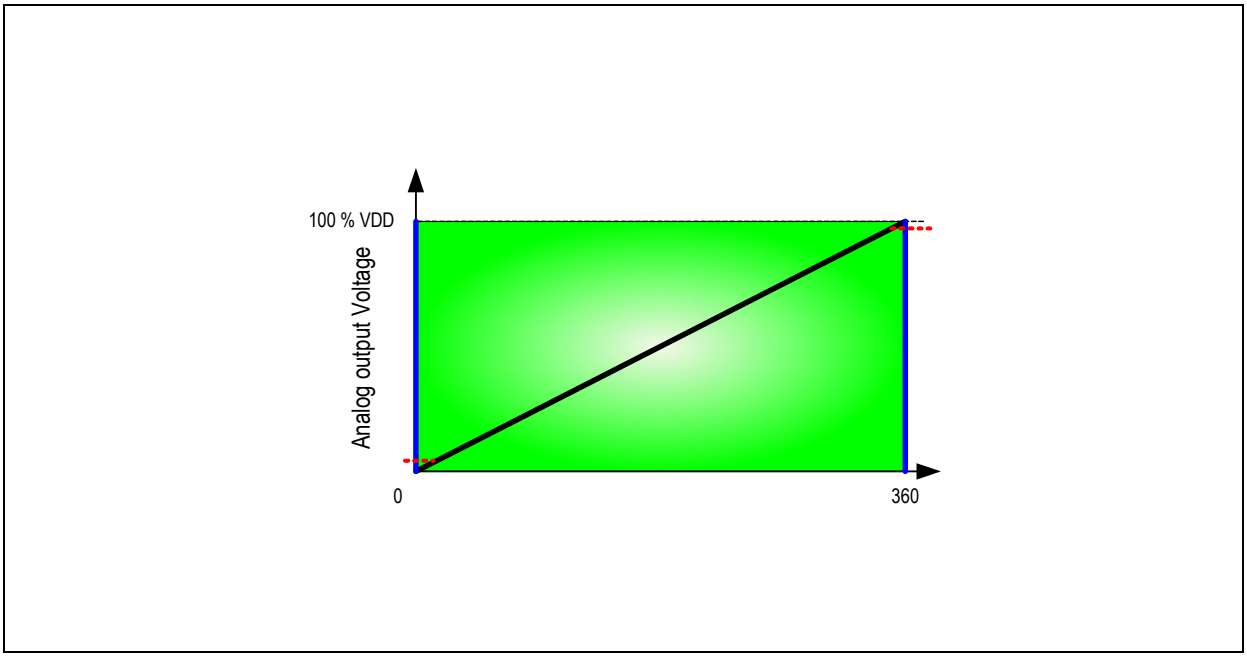

For simplification, Figure 7 describes a linear output voltage from rail to rail (0V to VDD) over the complete rotation range. In practice, this is not feasible due to saturation effects of the output stage transistors. The actual curve will be rounded towards the supply rails (as indicated Figure 7).

8.2.5 Multiple Slope Output

The AS5162 can be programmed to multiple slopes. Where one programmed reference slope characteristic is copied to multiple slopes. Two, three and four slopes are selectable by the user OTP bits QUADEN (1:0). In addition to the steepness of the slope the clamping levels can be programmed as well.

Figure 8. Two Slope Mode

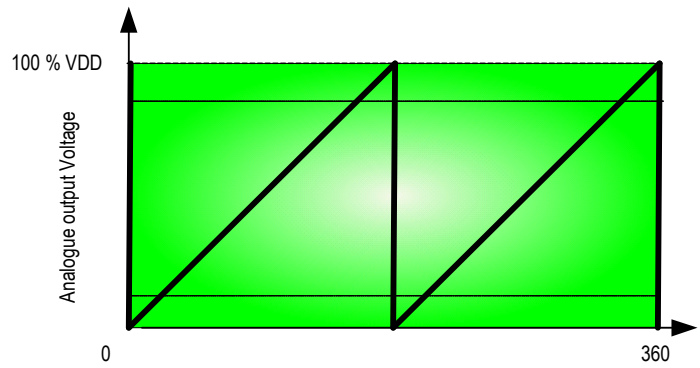

Figure 9. Four Slope Mode

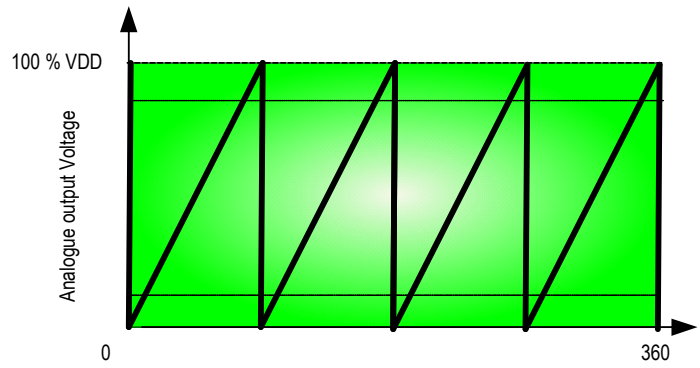

8.2.6 Linearization of the Output

To improve the system linearity an additional 2 point linearization function is implemented in the AS5162.

Figure 10. Linearization of the Output Characteristic

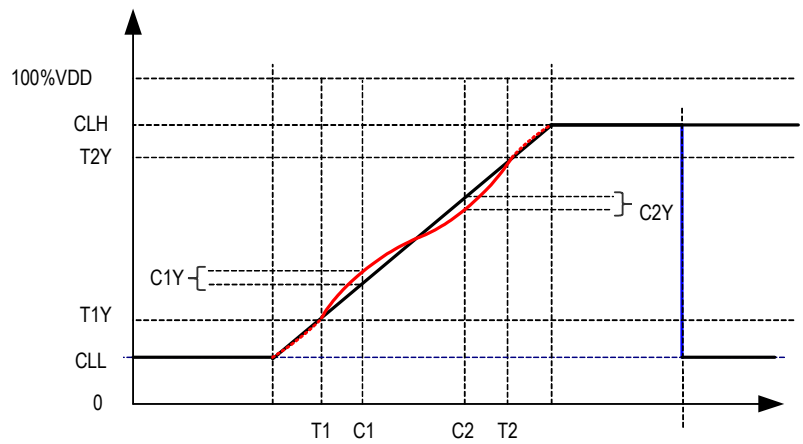

8.2.7 Resolution of Parameters

The programming parameters have a wide resolution of up to 14 bits.

Table 8. Resolution of the Programming Parameters

Symbol	Parameter	Resolution	Note
T1	Mechanical angle start point	14 bits	
T2	Mechanical angle stop point	14 bits	
T1Y	Mechanical start voltage level	12 bits	
T2Y	Mechanical stop voltage level	12 bits	
CLL	Clamping level low	9 bits	
CLH	Clamping level high	9 bits	
BP	Break point	14 bits	
C1	Calibration Point 1	4 bits	
C2	Calibration Point 2	4 bits	
C1Y	Trim value C1	3 bits	
C2Y	Trim value C2	3 bits	

Figure 11. Overview of the Angular Output Voltage

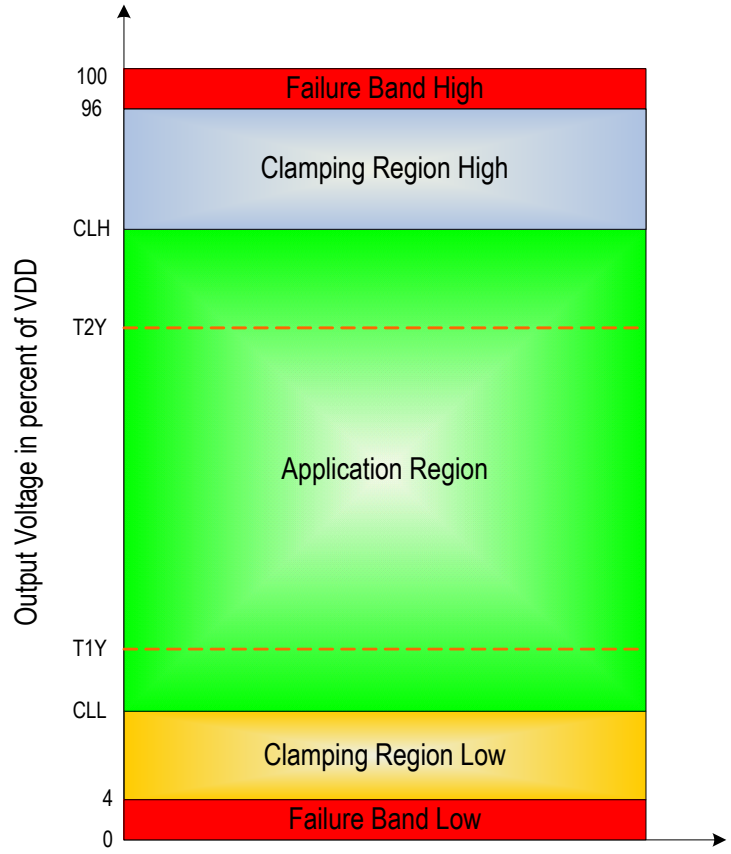

Figure 11 gives an overview of the different ranges. The failure bands are used to indicate a wrong operation of the AS5162. This can be caused due to a broken supply line. By using the specified load resistors, the output level will remain in these bands during a fail. It is recommended to set the clamping level **CLL** above the lower failure band and the clamping level **CLH** below the higher failure band.

8.2.8 Analog Output Diagnostic Mode

Due to the low pin count in the application a wrong operation must be indicated by the output pin **OUT**. This could be realized using the failure bands. The failure band is defined with a fixed level. The failure band low is specified from 0 to 4% of the supply range over the total operation range. The failure band high is defined always from 96 to 100%. Several failures can happen during operation. The output signal remains in these bands over the specified operating and load conditions. All different failures can be grouped into the internal alarms (failures) and the application related failures.

C_{LOAD} ≤ 33 nF, R_{PU}= 4k…10kΩ

R_{PD}= 4k…10kΩ load pull-up

Table 9. Different Failure Cases of AS5162

Type	Failure Mode	Symbol	Failure Band	Note
Internal alarms (failures)	Out of magnetic range (too less or too high magnetic input)	MAGRng	High/Low	Programmable by OTP bit **DIAG_HIGH**
	Cordic overflow	COF	High/Low	Programmable by OTP bit **DIAG_HIGH**
	Offset compensation finished	OCF	High/Low	Programmable by OTP bit **DIAG_HIGH**
	Watchdog fail	WDF	High/Low	Programmable by OTP bit **DIAG_HIGH**
	Oscillator fail	OF	High/Low	Programmable by OTP bit **DIAG_HIGH**
Application related failures	Overvoltage condition	OV	High/Low	Dependant on the load resistor Pull up → failure band high Pull down → failure band low
	Broken VDD	BVDD		
	Broken VSS	BVSS		
	Short circuit output	SCO	High/Low	Switch off → short circuit dependent

For efficient use of diagnostics, it is recommended to program to clamping levels **CLL** and **CLH**.

8.2.9 Analog Output Driver Parameters

The output stage is configured in a push-pull output. Therefore it is possible to sink and source currents.

C_{LOAD} ≤ 33 nF, R_{PU}= 4k…10kΩ ; R_{PD}= 4k…10kΩ load pull-up

Table 10. General Parameters for the Output Driver

Symbol	Parameter	Min	Typ	Max	Unit	Note
IOUTSCL	Short circuit output current (low side driver)	5	10	20	mA	V_{OUT}=20V
IOUTSCH	Short circuit output current (high side driver)	-20	-10	-5	mA	V_{OUT}=0V
TSCDET	Short circuit detection time	20		600	µs	output stage turned off
TSCREC	Short circuit recovery time	2		20	ms	output stage turned on
ILEAKOUT	Output Leakage current	-20		20	µA	V_{OUT}=VDD=5V
BGNDPU	Output voltage broken GND with pull-up	96		100	%VDD	
BGNDPD	Output voltage broken GND with pull-down	0		4	%VDD	
BVDDPU	Output voltage broken VDD with pull-up	96		100	%VDD	
BVDDPD	Output voltage broken VDD with pull-down	0		4	%VDD	
OUTRATIO	Output ratiometric error	-0.5		0.5	%VDD	
OUTDNL	Output DNL			10(1)	LSB	Between 4% and 96% of VDD
OUTINL	Output INL	-10(2)		10(2)	LSB	Between 4% and 96% of VDD

Notes:

1. This parameter will be finally defined after temperature characterisation.
2. Design target for this value is reduced.

8.2.10 Noise Suppressor

The noise suppressor is inserted after the angle calculation (first stage) and after range expansion (second stage). This function is capable to reduce the noise level down to 1 LSB peak to peak over different programing ranges.

4 possible configurations of the noise suppressor can be selected via the OTP bits **FILTERCFG<1:0>**.

8.2.11 Hysteresis Function

AS5162 device includes a hysteresis function to avoid sudden jumps from CLH to CLL and vice versa caused by noise in the full turn configuration.

The hysteresis amplitude can be selected via the OTP bits **HYSTSEL<1:0>**.

9 Application Information

9.1 Recommended Application Schematic

Figure 12 and Figure 13 show the recommended schematic in the application. All components marked with (*) are optional and can be used to further increase the EMC.

Figure 12. Recommended Schematic in Pull-Down Configuration

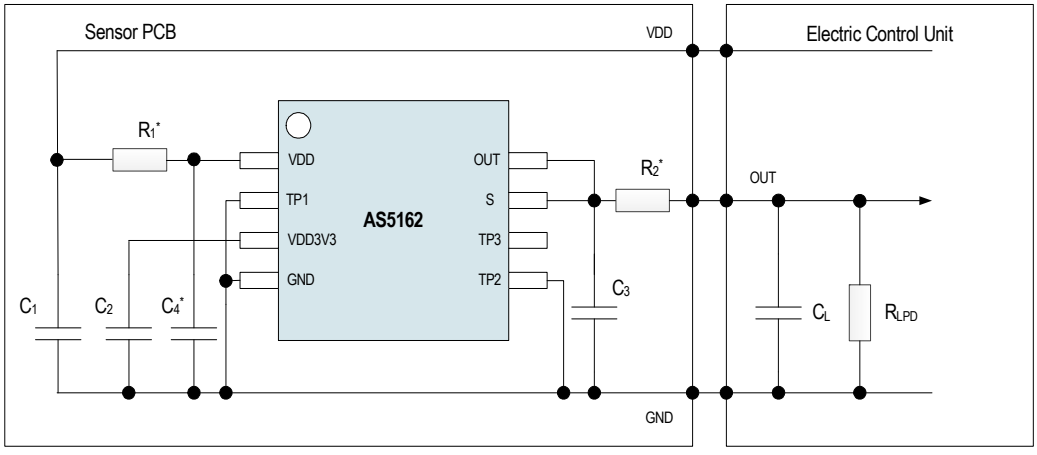

Figure 13. Recommended Schematic in Pull-Up Configuration

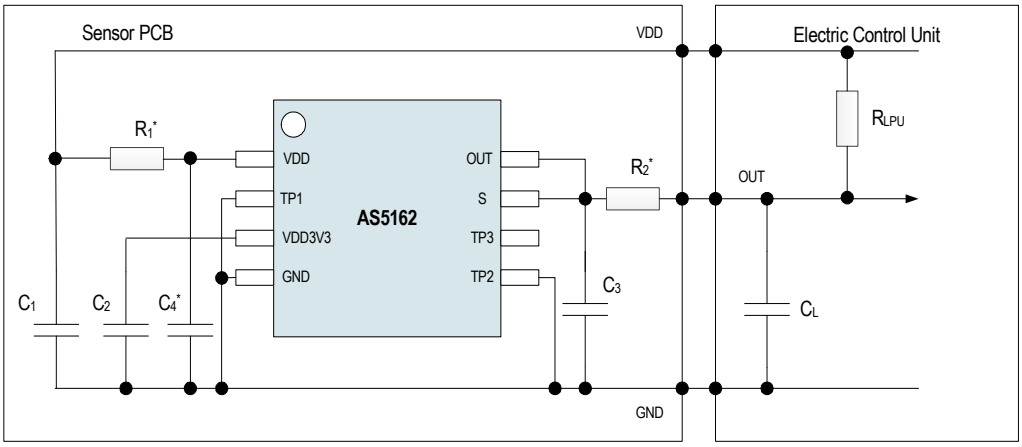

Table 11. External Components

Symbol	Parameter	Min	Typ	Max	Unit	Note
C_1	VDD buffer capacitor	0.8	1	1.2	µF	Low ESR 0.3 Ω
C_2	VDD3V3 regulator capacitor	0.8	1	1.2	µF	Low ESR 0.3 Ω
C_3	OUT load capacitor (sensor PCB)	0		4.7	nF	
C_4^*	VDD capacitor (optional)		4.7		nF	Do not increase due to programming over output.
R_1^*	VDD serial resistor (optional)		10		Ω	
C_L	OUT load capacitor (ECU)	0		33	nF	
R_2^*	OUT serial resistor (optional)		50		Ω	
R_{LPU}	OUT pull-up resistance	4		10	kΩ	
R_{LPD}	OUT pull-down resistance	4		10	kΩ	

9.2 Programming the AS5162

The AS5162 programming is a one-time-programming (OTP) method, based on polysilicon fuses. The advantage of this method is that no additional programming voltage is needed. The internal LDO provides the current for programming.

The OTP consists of 128 bits; several bits are available for user programming. In addition factory settings are stored in the OTP memory. Both regions are independently lockable by build in lock bits.

A single OTP cell can be programmed only once. Per default, the cell is “0”; a programmed cell will contain a “1”. While it is not possible to reset a programmed bit from “1” to “0”, multiple OTP writes are possible, as long as only unprogrammed “0”-bits are programmed to “1”.

Independent of the OTP programming, it is possible to overwrite the OTP register temporarily with an OTP write command. This is possible only if the user lock bit is not programmed.

Due to the programming over the output pin the device will initially start in the communication mode. In this mode the digital angle value can be read with a specific protocol format. It is a bidirectional communication possible. Parameters can be written into the device. A programming of the device is triggered by a specific command. With another command (pass2func) the device can be switched into operation mode. In case of a programmed user lock bit the AS5162 automatically starts up in the functional operation mode. No communication of the specific protocol is possible after this.

A standard half duplex UART protocol is used to exchange data with the device in the communication mode.

9.2.1 UART Interface for Programming

The AS5162 uses a standard UART interface with an address byte and two data bytes. The read or write mode is selected with bit R/Wn in the first byte. The timing (baudrate) is selected by the AS5162 over a synchronization frame. The baud rate register can be read and overwritten (optional). Every start bit is used for synchronisation.

A time out function detects not complete commands and resets the AS5162 UART after the timeout period.

9.2.2 Frame Organization

Each frame is composed by 24 bits. The first byte of the frame specifies the read/write operation with the register address. 16 data bits contains the communication data. There will be no operation in case of the usage of a not specified CMD. The UART programming interface block of the AS5162 can operate in slave communication or master communication mode. In the slave communication mode the AS5162 receives the data. The programming tool is the driver of the single communication line. In case of the master communication mode the AS5162 transmits data in the frame format. The single communication line can be pulled down by the AS5162.

The UART frame consists of 1 start bit (low level), 8 data bit, 1 even-parity bit and 1 stop bit (high level). Data are transferred from LSB to MSB

Figure 14. General UART Frame

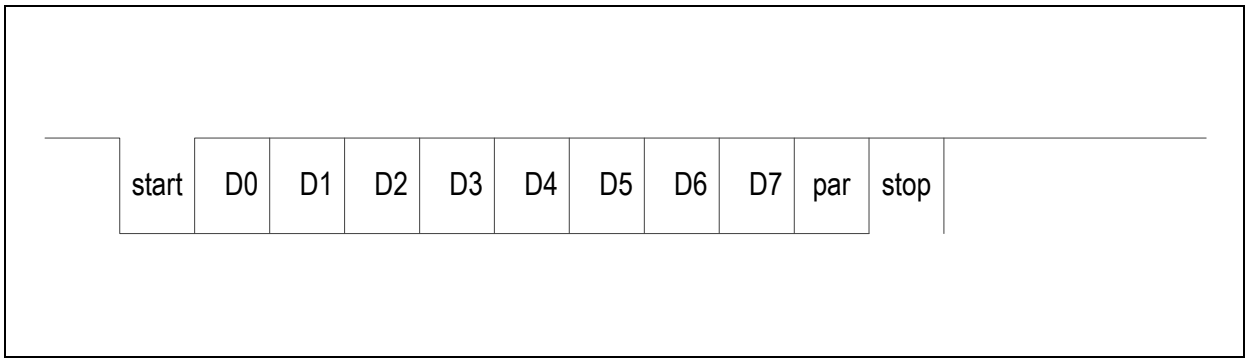

Table 12. Bit Timing

Symbol	Parameter	Min	Typ	Max	Unit	Note
START	Start bit		1		TBIT	
Dx	Data bit		1		TBIT	
PAR	Parity bit		1		TBIT	
STOP	Stop bit	1			TBIT	
TSW	Slave/Master Switch Time		7		TBIT	

Each communication starts with the reception of a request from the external controller. The request consists of two frames: one synchronization frame and the command frame.

The synchronization frame contains the data 0x55 and allows the UART to measure the external controller baud rate:

Figure 15. Synchronization Frame

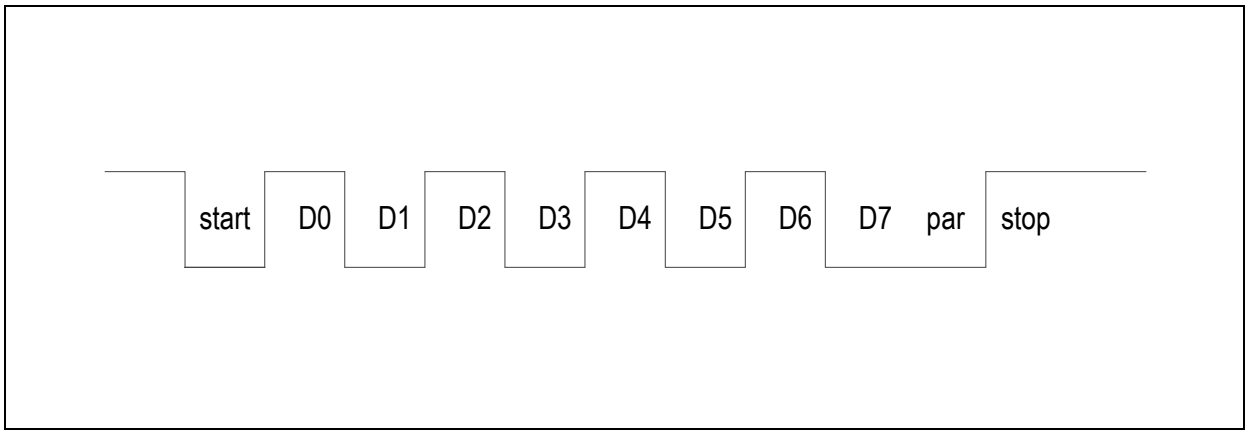

The second frame contains the command Read/ Write (1 bit) and the address (7 bits):

Figure 16. Address and Command Frame

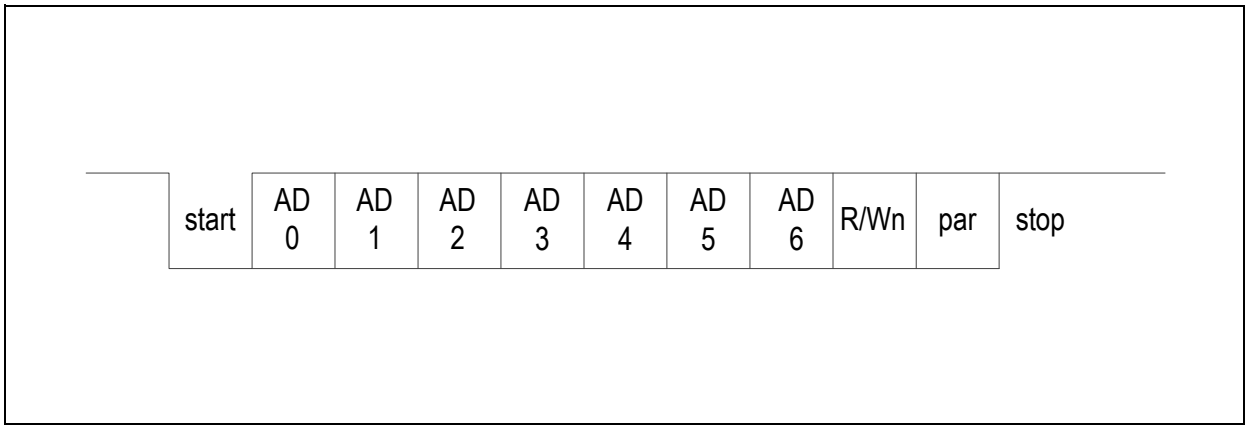

Only two commands are possible. In case of read command the idle phase between the command and the answer is the time TSW. In case of parity error command is not executed.

Table 13. Possible Commands

Possible Interface Commands	Description	AS5X63 Communication Mode	Command CMD
WRITE	Write data to the OTP memory or Registers	SLAVE	0
READ	Read data to the OTP memory or Registers	SLAVE & MASTER	1

Notes:

1. In case of Write command the request is followed by the frames containing the data to write.
2. In case of Read command the communication direction will change and the AS5162 will answer with the frames containing the requested data.

9.2.3 WRITE (Command Description)

Figure 17. Full Write Command

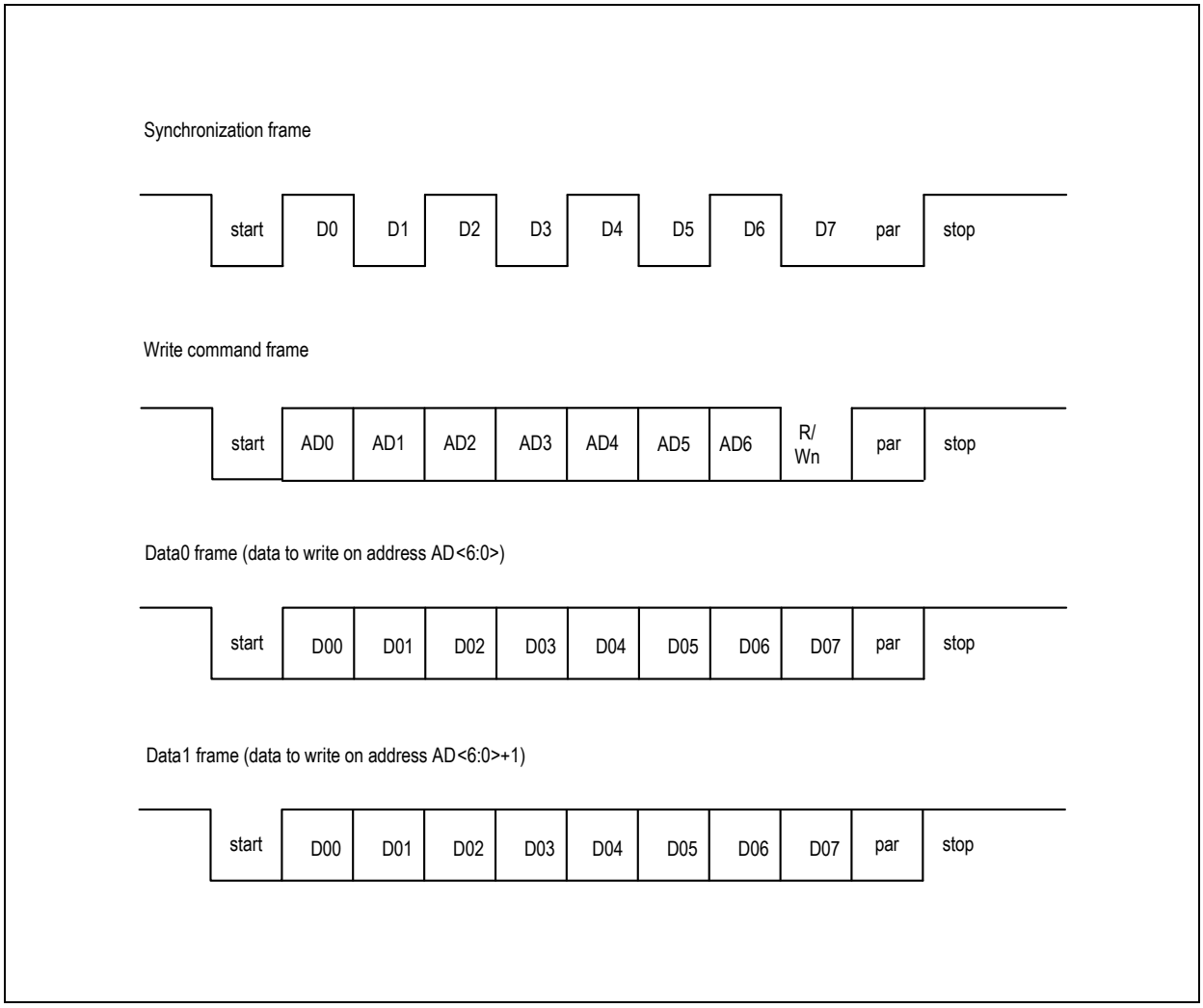

- Writing the AS5162 KEY in the fuse register (address 0x41) triggers the transfer of the data from the OTP RAM into the Poly Fuse cell.
- Writing the AS5162 KEY in the Pass2Func Register (address 0x60) forces the device into normal mode.

9.2.4 READ (Command Description)

Figure 18. Full Read Command

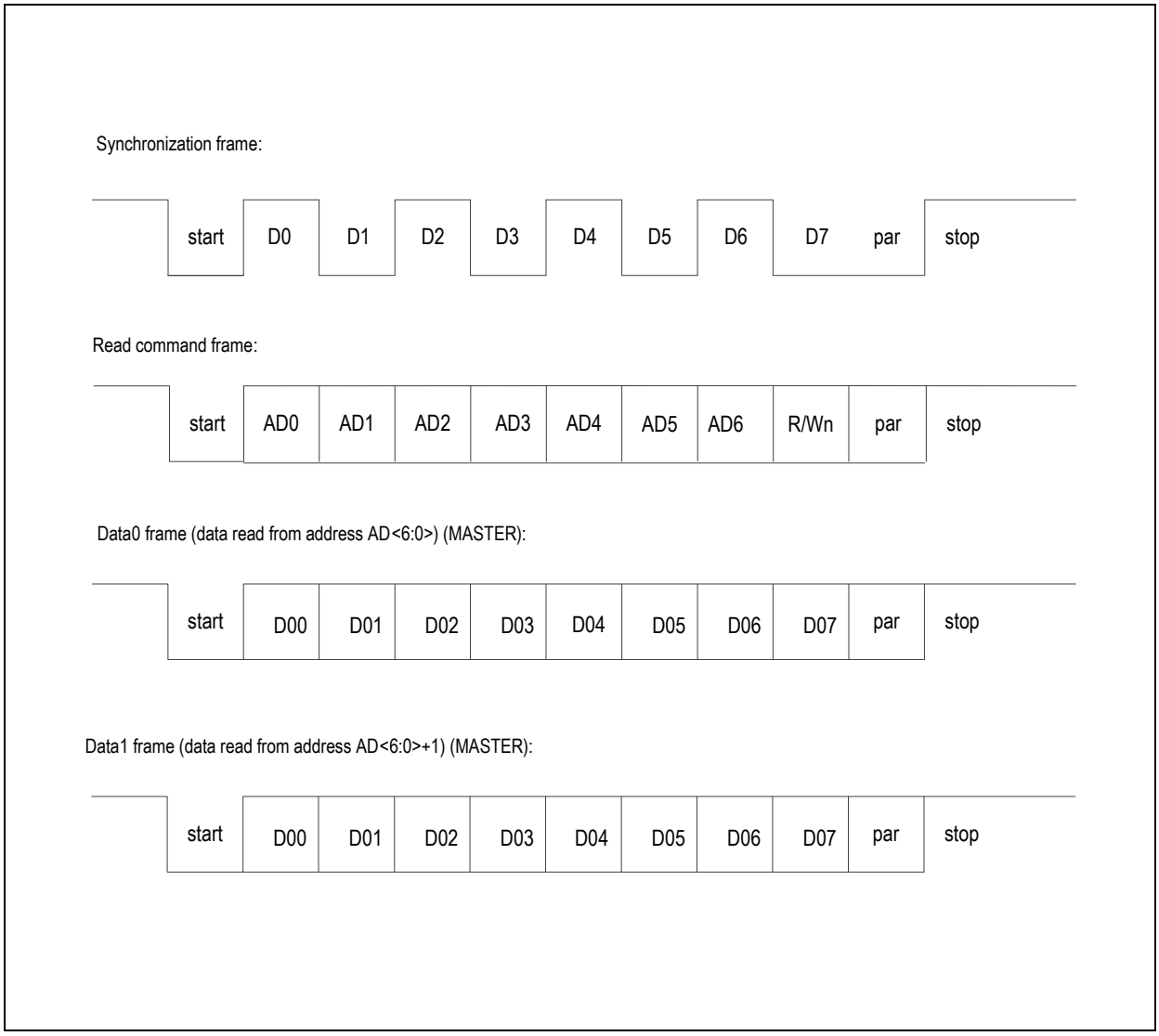

9.2.5 Baud-rate Automatic Detection

The UART includes a built-in baud-rate monitor that uses the synchronization frame to detect the external controller baud-rate. This baud-rate is used after the synchronization byte to decode the following frame and to transmit the answer and it is stored in the BAUDREG register.

9.2.6 Baud-rate Manual Setting (optional)

The BAUDREG register can be read and over-written for a possible manual setting of the baud-rate: in case the register is overwritten with a value different from 0, this value will be used for the following UART communications and the synchronization frame must be removed from the request.

Figure 19. Manual Baud-rate Setting

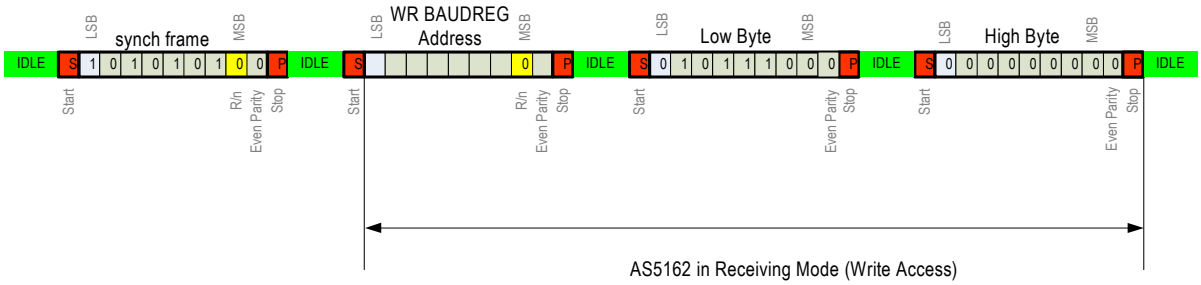

Figure 20. Simple Read and Write

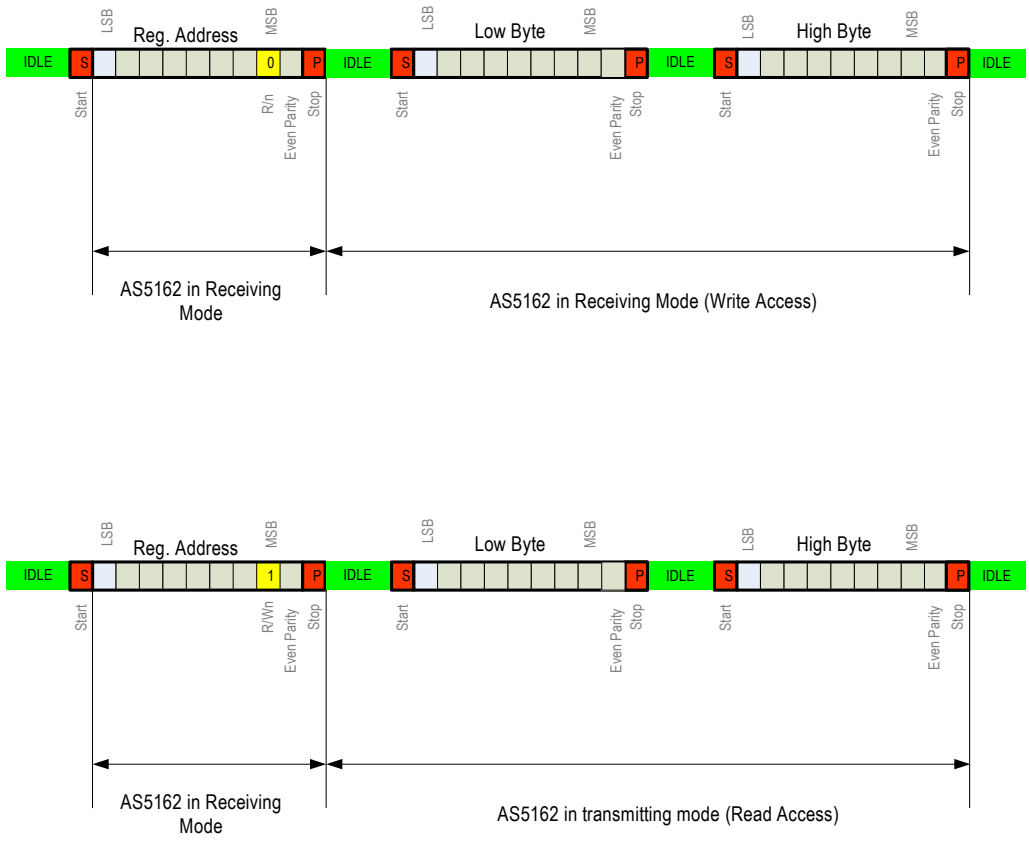

9.3 OTP Programming Data

Table 14. OTP Memory Map

Data Byte	Bit Number	Symbol	Default	Description	
DATA15 (0x0F)	0	Factory Settings	0	AMS (reserved)	Factory Settings
	1		0		
	2		0		
	3		0		
	4		0		
	5		0		
	6		0		
	7		0		
DATA14 (0x0E)	0		0		
	1		0		
	2		0		
	3		0		
	4		0		
	5		0		
	6		0		
	7		0		
DATA13 (0x0D)	0		0		
	1		0		
	2	CUSTID<0>	0	Customer Identifier	Customer Settings
	3	CUSTID<1>	0		
	4	CUSTID<2>	0		
	5	CUSTID<3>	0		
	6	CUSTID<4>	0		
	7	CUSTID<5>	0		
DATA12 (0x0C)	0	CUSTID<6>	0		
	1	X2LIN<0>	0	Second linearization point (X-axis)	
	2	X2LIN<1>	0		
	3	X2LIN<2>	0		
	4	X2LIN<3>	0		
	5	X1LIN<0>	0	First linearization point (X-axis)	
	6	X1LIN<1>	0		
	7	X1LIN<2>	0		
DATA11 (0x0B)	0	X1LIN<3>	0		
	1	Y1LIN<0>	0	First linearization point (Y-axis)	

Table 14. OTP Memory Map

Data Byte	Bit Number	Symbol	Default	Description	
	2	Y1LIN<1>	0	First linearization point (Y-axis)	Customer Settings
	3	Y1LIN<2>	0		
	4	Y2LIN<0>	0	Second linearization point (Y-axis)	
	5	Y2LIN<1>	0		
	6	Y2LIN<2>	0		
	7	CLH<0>	0	Clamping Level High	
DATA10 (0x0A)	0	CLH<1>	0		
	1	CLH<2>	0		
	2	CLH<3>	0		
	3	CLH<4>	0		
	4	CLH<5>	0		
	5	CLH<6>	0		
	6	CLH<7>	0		
	7	CLH<8>	0		
DATA9 (0x09)	0	CLL<0>	0	Clamping Level Low	
	1	CLL<1>	0		
	2	CLL<2>	0		
	3	CLL<3>	0		
	4	CLL<4>	0		
	5	CLL<5>	0		
	6	CLL<6>	0		
	7	CLL<7>	0		
DATA8 (0x08)	0	CLL<8>	0		
	1	OFFSET<0>	0	Offset	
	2	OFFSET<1>	0		
	3	OFFSET<2>	0		
	4	OFFSET<3>	0		
	5	OFFSET<4>	0		
	6	OFFSET<5>	0		
	7	OFFSET<6>	0		
DATA7 (0x07)	0	OFFSET<7>	0		
	1	OFFSET<8>	0		
	2	OFFSET<9>	0		
	3	OFFSET<10>	0		
	4	OFFSET<11>	0		
	5	OFFSET<12>	0		
	6	OFFSET<13>	0		
	7	OFFSET<14>	0		

Table 14. OTP Memory Map

Data Byte	Bit Number	Symbol	Default	Description	
DATA6 (0x06)	0	OFFSET<15>	0	Offset	Customer Settings
	1	OFFSET<16>	0		
	2	OFFSET<17>	0		
	3	OFFSET<18>	0		
	4	OFFSET<19>	0		
	5	GAIN<0>	0	Scale Factor	
	6	GAIN<1>	0		
	7	GAIN<2>	0		
DATA5 (0x05)	0	GAIN<3>	0		
	1	GAIN<4>	0		
	2	GAIN<5>	0		
	3	GAIN<6>	0		
	4	GAIN<7>	0		
	5	GAIN<8>	0		
	6	GAIN<9>	0		
	7	GAIN<10>	0		
DATA4 (0x04)	0	GAIN<11>	0		
	1	GAIN<12>	0		
	2	GAIN<13>	0		
	3	GAIN<14>	0		
	4	GAIN<15>	0		
	5	GAIN<16>	0		
	6	BP<0>	0	Break Point	
	7	BP<1>	0		
DATA3 (0x003)	0	BP<2>	0		
	1	BP<3>	0		
	2	BP<4>	0		
	3	BP<5>	0		
	4	BP<6>	0		
	5	BP<7>	0		
	6	BP<8>	0		
	7	BP<9>	0		
DATA2 (0x02)	0	BP<10>	0		
	1	BP<11>	0		
	2	BP<12>	0		
	3	BP<13>	0		
	4	ANGLERNG	0	Sector selection 0=Angular Sector≥22.5 degrees; 1=Angular Sector<22.5 degrees	
	5	DIAG_HIGH	0	Failure Band Selection 0=Failure Band Low 1=Failure Band High	

Table 14. OTP Memory Map

Data Byte	Bit Number	Symbol	Default	Description	
DATA2 (0x02)	6	QUADEN<0>	0	Quadrant Mode Enable 00=1quadrant;01=2quadrants; 10=3 quadrants;11=4 quadrants	Customer Settings
	7	QUADEN<1>	0		
DATA1 (0x01)	0	AIRGAPSEL	0	Magnetic input range extension 0:extended range;1=normal range	
	1	HYSTSEL<0>	0	Hysteresis selection 00=no hysteresis; 01: 56LSB; 10=91LSB; 11=137LSB	
	2	HYSTSEL<1>	0		
	3	FILTERCFG<0>	0	Filter Configuration 00=no filter; 01= fast; 10=moderate; 11=slow	
	4	FILTERCFG<1>	0		
	5	Not used	0		
	6	Not used	0		
	7	Not used	0		
DATA0 (0x00)	0	RED_ADD<0>	0	Redundancy Address Identify the address of the byte containing the bit to be changed	
	1	RED_ADD<1>	0		
	2	RED_ADD<2>	0		
	3	RED_ADD<3>	0		
	4	RED_BIT<0>	0	Redundancy Bit Identify the position of the bit to be changed in the byte at the address RED_ADD<3:0>	
	5	RED_BIT<1>	0		
	6	RED_BIT<2>	0		
	7	CUST_LOCK	0	Lock bit for Customer Area	

9.4 READ / WRITE Register Map

Table 15. Read / Write Registers

Data Byte	Bit Number	Symbol	Default	Description	
DATA0 (0x20)	0	BAUDREG<0>	0	UART Baud Rate Register	Read/Write Area
	1	BAUDREG<1>	0		
	2	BAUDREG<2>	0		
	3	BAUDREG<3>	0		
	4	BAUDREG<4>	0		
	5	BAUDREG<5>	0		
	6	BAUDREG<6>	0		
	7	BAUDREG<7>	0		
DATA1 (0x21)	0	BAUDREG<8>	0		
	1	Not used	0	A read command returns all data bits at 0	
	2	Not used	0		
	3	Not used	0		
	4	Not used	0		
	5	Not used	0		
	6	Not used	0		
	7	Not used	0		
DATA2 (0x22)	0	DAC12IN<8>	0	DAC12 buffer value	
	1	DAC12IN<9>	0		
	2	DAC12IN<10>	0		
	3	DAC12IN<11>	0		
	4	DAC12INSEL	0	DAC12 buffer selection	
	5	R1K10K<0>	0	Selection of the reference resistance used for OTP download	
	6	R1K10K<1>	0		
	7	DSPRN	0	Resetn of the Digital Signal Processing circuit	
DATA3 (0x23)	0	DAC12IN<0>	0	DAC12 buffer value	
	1	DAC12IN<1>	0		
	2	DAC12IN<2>	0		
	3	DAC12IN<3>	0		
	4	DAC12IN<4>	0		
	5	DAC12IN<5>	0		
	6	DAC12IN<6>	0		
	7	DAC12IN<7>	0		

9.5 READ Only Register Map

Table 16. Read Only Registers

Data Byte	Bit Number	Symbol	Default	Description	
DATA0 (0x28)	0	Not used	0	A read command returns 0	Read Area
	1	OFFSETFINISHED	0	Offset compensation finished	
	2	AGCFINISHED	0	AGC loop compensation finished	
	3	CORDICOVF	0	Overflow of the Cordic	
	4	AGCALARML	0	AGC loop saturation because of B field too strong	
	5	AGCALARMH	0	AGC loop saturation because of B field too weak	
	6	OTP_RES	0	0=1K resistance selected for OTP download; 1=10K resistance selected for OTP download	
	7	PARITY_ERR	0	UART parity error flag	
DATA1 (0x29)	0	CORDICOUT<0>	0	Cordic Output	
	1	CORDICOUT<1>	0		
	2	CORDICOUT<2>	0		
	3	CORDICOUT<3>	0		
	4	CORDICOUT<4>	0		
	5	CORDICOUT<5>	0		
	6	CORDICOUT<6>	0		
	7	CORDICOUT<7>	0		
DATA2 (0x2A)	0	CORDICOUT<8>	0		
	1	CORDICOUT<9>	0		
	2	CORDICOUT<10>	0		
	3	CORDICOUT<11>	0		
	4	CORDICOUT<12>	0		
	5	CORDICOUT<13>	0		
	6	Not used	0	A read command returns all data bits at 0	
	7	Not used	0		
DATA3 (0x2B)	0	DSPOUT<0>	0	DSP Output	
	1	DSPOUT<1>	0		
	2	DSPOUT<2>	0		
	3	DSPOUT<3>	0		
	4	DSPOUT<4>	0		
	5	DSPOUT<5>	0		
	6	DSPOUT<6>	0		
	7	DSPOUT<7>	0		

Table 16. Read Only Registers

Data Byte	Bit Number	Symbol	Default	Description	
DATA4 (0x2C)	0	DSPOUT<8>	0	DSP Output	Read Area
	1	DSPOUT<9>	0		
	2	DSPOUT<10>	0		
	3	DSPOUT<11>	0		
	4	Not used	0	A read command returns all data bits at 0	
	5	Not used	0		
	6	Not used	0		
	7	Not used	0		
DATA5 (0x2D)	0	AGCVALUE<0>	0	AGC Value	
	1	AGCVALUE<1>	0		
	2	AGCVALUE<2>	0		
	3	AGCVALUE<3>	0		
	4	AGCVALUE<4>	0		
	5	AGCVALUE<5>	0		
	6	AGCVALUE<6>	0		
	7	AGCVALUE<7>	0		
DATA6 (0x2E)	0	MAG<0>	0	Magnitude of magnetic field	
	1	MAG<1>	0		
	2	MAG<2>	0		
	3	MAG<3>	0		
	4	MAG<4>	0		
	5	MAG<5>	0		
	6	MAG<6>	0		
	7	MAG<7>	0		
DATA7 (0x2F)	0	Not used	0	A read command returns all data bits at 0	
	1	Not used	0		
	2	Not used	0		
	3	Not used	0		
	4	Not used	0		
	5	Not used	0		
	6	Not used	0		
	7	Not used	0		

9.6 Special Registers

Table 17. Special Registers

Data Byte	Bit Number	Symbol	Default	Description	
DATA0 (0x41)	0	AS5162KEY<0>	0	AS5162 KEY<15:0>=0101 0001 0110 0010 A write command with data different from AS5162 KEY is not executed A read command returns all data bits at 0	Fuse Register
	1	AS5162KEY<1>	0		
	2	AS5162KEY<2>	0		
	3	AS5162KEY<3>	0		
	4	AS5162KEY<4>	0		
	5	AS5162KEY<5>	0		
	6	AS5162KEY<6>	0		
	7	AS5162KEY<7>	0		
DATA1 (0x42)	0	AS5162KEY<8>	0		
	1	AS5162KEY<9>	0		
	2	AS5162KEY<10>	0		
	3	AS5162KEY<11>	0		
	4	AS5162KEY<12>	0		
	5	AS5162KEY<13>	0		
	6	AS5162KEY<14>	0		
	7	AS5162KEY<15>	0		
DATA0 (0x60)	0	AS5162KEY<0>	0	AS5162 KEY<15:0>=0101 0001 0110 0010 A write command with data different from AS5162 KEY is not executed A read command returns all data bits at 0	Pass2Func Register
	1	AS5162KEY<1>	0		
	2	AS5162KEY<2>	0		
	3	AS5162KEY<3>	0		
	4	AS5162KEY<4>	0		
	5	AS5162KEY<5>	0		
	6	AS5162KEY<6>	0		
	7	AS5162KEY<7>	0		
DATA1 (0x61)	0	AS5162KEY<8>	0		
	1	AS5162KEY<9>	0		
	2	AS5162KEY<10>	0		
	3	AS5162KEY<11>	0		
	4	AS5162KEY<12>	0		
	5	AS5162KEY<13>	0		
	6	AS5162KEY<14>	0		
	7	AS5162KEY<15>	0		

9.7 Programming Procedure

- Pull-up on out pin
- VDD=5V
- Wait 10ms (after the startup time device enters communication mode)
- Write command: Trimming bits are written in the OTP RAM
- Read command: All the trimming bits are read back to check the correctness of the writing procedure.
- Write AS5162KEY in the Fuse register: The OTP RAM content is permanently transferred into the Poly Fuse cells.
- Wait 10 ms (fuse time)
- Write command, R1K_10K<1:0>=(11)b: Poly Fuse cells are downloaded into the RAM memory using a 10K resistance as reference.
- Wait 5 ms (download time)
- Read R1K_10K register, the expected value is 00b
- Write command, R1K_10K<1:0>=(11)b
- Read R1K_10K register, the expected value is (11)b. NB: Step11 and Step12 have to be consecutive.
- Read command: all the fused bits downloaded with 10K resistance are read back.
- Write command, R1K_10K=<1:0>=(10)b: Poly Fuse cells are downloaded into the RAM memory using a 1K resistance as reference.
- Wait 5 ms (download time)
- Read R1K_10K register, the expected value is (00)b
- Write command register, R1K_10K<1:0>=(10)b
- Read R1K_10K register, the expected value is (10)b NB: Step18 and Step19 have to be consecutive.
- Read command: All the fused bits downloaded with 1K resistance are read back.
- Check that read commands at Steps 5, 13 and 19 are matching
- Write AS5162KEY in the Pass2Func register: Device enters normal mode.

10 Package Drawings and Markings

The device is available in a SOIC 8 - Lead 150 MIL Package.

Figure 21. Package Drawings and Dimensions

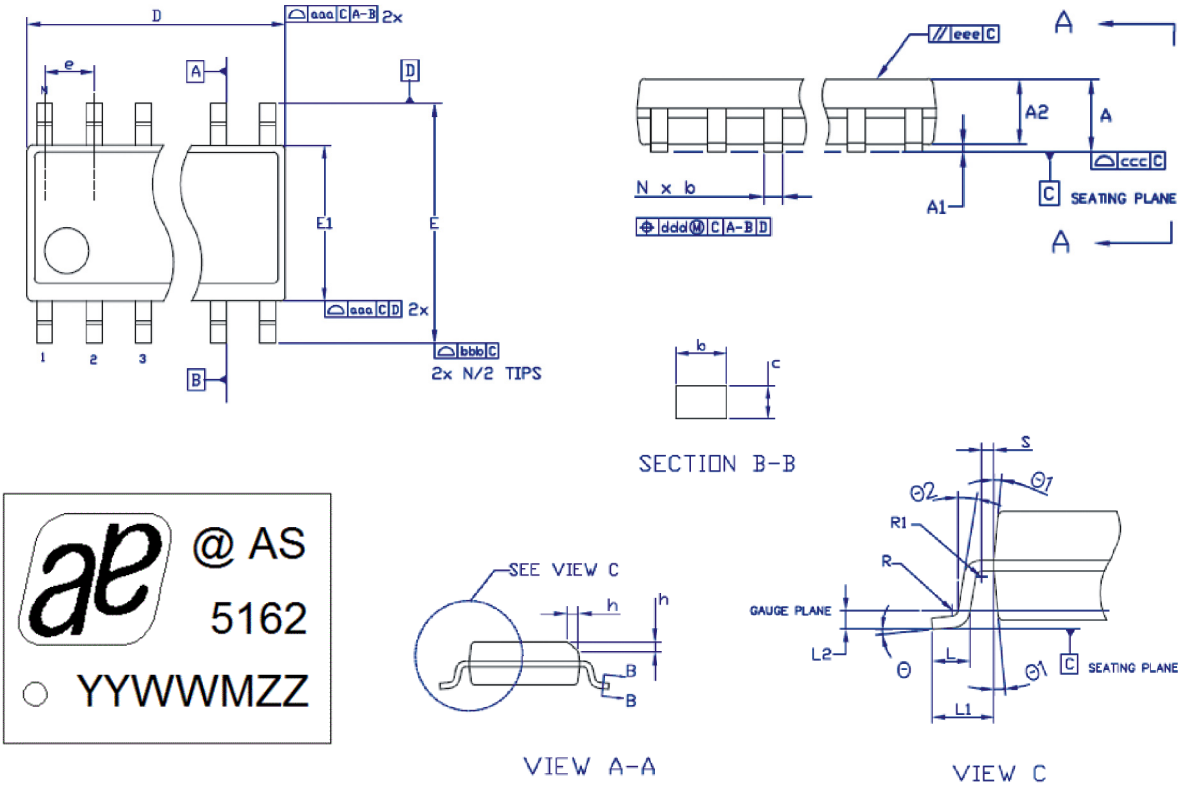

Symbol	Min	Nom	Max
A	-	-	1.75
A1	0.10	-	0.25
A2	1.25	-	-
b	0.31	-	0.51
c	0.17	-	0.25
D	-	4.90 BSC	-
E	-	6.00 BSC	-
E1	-	3.90 BSC	-
e	-	1.27 BSC	-
L	0.40	-	1.27
L1	-	1.04 REF	-
L2	-	0.25 BSC	-

Symbol	Min	Typ	Max
R	0.07	-	-
R1	0.07	-	-
h	0.25	-	0.50
Θ	0°	-	8°
Θ1	5°	-	15°
Θ2	0°	-	-
aaa	-	0.10	-
bbb	-	0.20	-
ccc	-	0.10	-
ddd	-	0.25	-
eee	-	0.10	-
fff	-	0.15	-
N	-	8	-

Notes:

1. Dimensions and tolerancing confirm to *ASME Y14.5M-1994*.
2. All dimensions are in miilimeters. Angles are in degrees.

Marking: YYWWMZZ.

YY	WW	M	ZZ
Year	Week	Assembly plant identifier	Assembly traceability code

Figure 22. Vertical Cross Section of SOIC-8

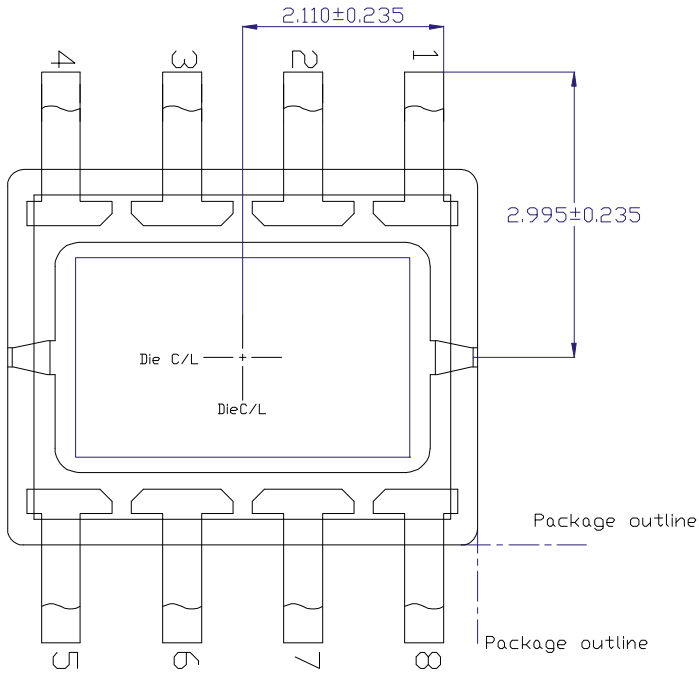

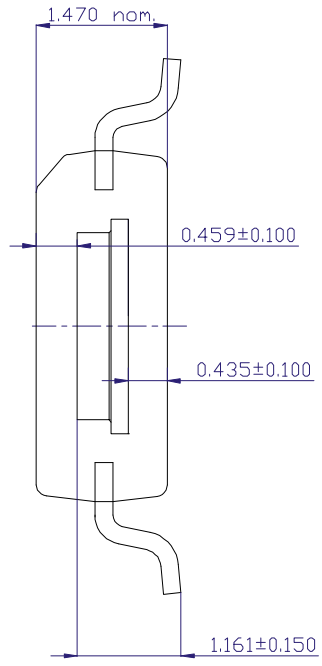

Notes:

1. All dimensions in mm.
2. Die thickness 356 µm nom.
3. Adhesive thickness 20 ± 10 µm.
4. Lead frame downest 200 ± 25 µm.
5. Lead frame thickness 200 ± 8 µm.

Revision History

Revision	Date	Owner	Description
1.0	Aug 23, 2012	REi	Initial revision
1.1	Sep 13, 2012	mub	Updated General Description, Applications, Figure 2, Table 7, Table 10 and Section 9.2.1
1.2	Oct 30, 2012		Updated Table 2
1.3	Oct 31, 2012		Updated Table 1, Table 2, Table 10, Figure 3, Figure 12 and Figure 13

Note: Typos may not be explicitly mentioned under revision history.

11 Ordering Information

The devices are available as the standard products shown in Table 18.

Table 18. Ordering Information

Ordering Code	Description	Delivery Form	Package
AS5162-HSOP, -HSOM	12-Bit Programmable Angle Position Sensor with analog output	Tape&Reel	SOIC - 8

Note: All products are RoHS compliant and ams green.
Buy our products or get free samples online at www.ams.com/ICdirect

Technical Support is available at www.ams.com/Technical-Support

For further information and requests, email us at sales@ams.com
(or) find your local distributor at www.ams.com/distributor

Copyrights

Copyright © 1997-2012, ams AG, Tobelbaderstrasse 30, 8141 Unterpremstaetten, Austria-Europe. Trademarks Registered ®. All rights reserved. The material herein may not be reproduced, adapted, merged, translated, stored, or used without the prior written consent of the copyright owner.

All products and companies mentioned are trademarks or registered trademarks of their respective companies.

Disclaimer

Devices sold by ams AG are covered by the warranty and patent indemnification provisions appearing in its Term of Sale. ams AG makes no warranty, express, statutory, implied, or by description regarding the information set forth herein or regarding the freedom of the described devices from patent infringement. ams AG reserves the right to change specifications and prices at any time and without notice. Therefore, prior to designing this product into a system, it is necessary to check with ams AG for current information. This product is intended for use in normal commercial applications. Applications requiring extended temperature range, unusual environmental requirements, or high reliability applications, such as military, medical life-support or life-sustaining equipment are specifically not recommended without additional processing by ams AG for each application. For shipments of less than 100 parts the manufacturing flow might show deviations from the standard production flow, such as test flow or test location.

The information furnished here by ams AG is believed to be correct and accurate. However, ams AG shall not be liable to recipient or any third party for any damages, including but not limited to personal injury, property damage, loss of profits, loss of use, interruption of business or indirect, special, incidental or consequential damages, of any kind, in connection with or arising out of the furnishing, performance or use of the technical data herein. No obligation or liability to recipient or any third party shall arise or flow out of ams AG rendering of technical or other services.

Contact Information

Headquarters

ams AG
Tobelbaderstrasse 30
A-8141 Unterpremstaetten, Austria

Tel : +43 (0) 3136 500 0
Fax : +43 (0) 3136 525 01

For Sales Offices, Distributors and Representatives, please visit:

http://www.ams.com/contact