PESD Protection Devices

TE's Polymer ESD (PESD) line of devices helps protect I/O ports on HDMI 1.3, portable video players, LCD and plasma TVs, USB 2.0, digital visual interface (DVI) and antenna switches. PESD devices shunt electrostatic discharge away from sensitive circuitry in HDTV equipment, printers, laptops, cellular phones and other portable devices.

PESD devices offer many advantages over traditional protection devices, such as multi layer varistors (MLVs), which may degrade or distort the signal in high data rate circuits. Compared to transient voltage suppression (TVS) diodes and miniature gas discharge tubes (GDTs), PESD devices provide a more compact form factor and an economical solution for the shrinking profiles of today's compact information appliances.

Available in a range of form factors, our PESD protection devices provide low capacitance and meet transmission line pulse (TLP) testing, as well as IEC61000-4-2 testing.

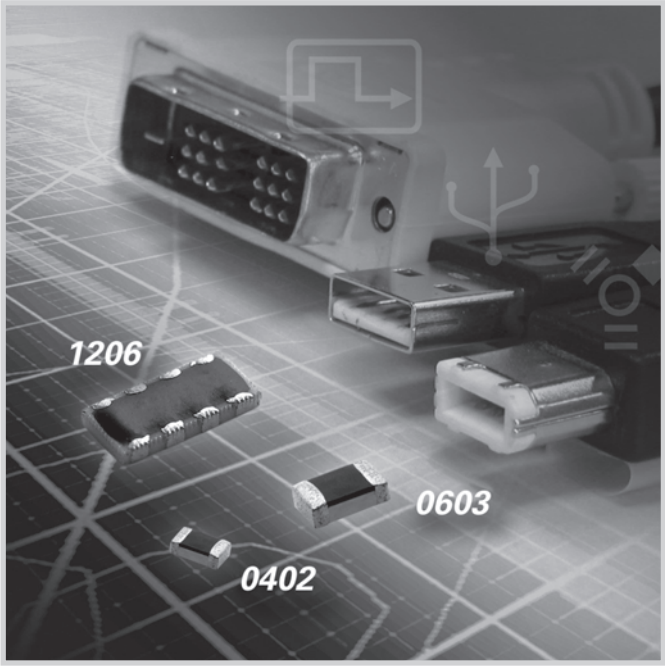

Benefits

- ESD protection for high-frequency applications (HDMI 1.3)
- Smaller form factor for board space savings
- Helps protect sensitive electronic circuits against damage caused by electrostatic discharge (ESD) events
- Assists equipment to pass IEC 61000-4-2, level 4 testing

Features

- RoHS compliant
- Lead free
- Halogen free (refers to: Br≤900ppm, Cl≤900ppm, Br+Cl≤1500ppm)
- 0.25 pF (typ) capacitance
- Low-leakage current
- Low-clamping voltage
- Fast response time (< 1ns)
- Capable of withstanding numerous ESD strikes
- Compatible with standard reflow installation procedures
- Thick film technology
- Bi-directional protection

Applications

- HDMI 1.3 interfaces
- LCD and plasma TVs
- Cellular phones
- Antennas
- Portable video players
- Portable devices (PDA, DSC, BlueTooth)
- Printer ports
- Satellite radios
- USB 2.0 and IEEE 1394 interfaces
- DVI
- GPS systems

RoHS Compliant, ELV Compliant HF Halogen Free

Table E1 Electrical Characteristics for PESD Devices

	Continuous Max Operating Voltage	Typ Trigger Voltage*	Typ Clamping Voltage†	Typ Capacitance @1 MHz, $1V_{RMS}$	Typ Leakage Current	Max Leakage Current @ Max V_{DC}
Symbol	V_{DC}	$V_{T(TLP)}$	$V_{C(TLP)}$	C_P	$I_{L(TYP)}$	$I_{L(MAX)}$
Unit	V	V	V	pF	µA	µA
PESD0402-140	14	250	40	0.25	< 0.01	10.0
PESD0603-240	24	215	45	0.25	< 0.01	10.0
PESD1206Q-240	24	250	45	0.25	< 0.01	10.0

Notes : * TLP test method at 1kV.
† Measured 30ns after pulse initiation.
Typical capacitance value is at 0V and max operating voltage bias.

Figure E1 Capacitance vs. Frequency for PESD Devices

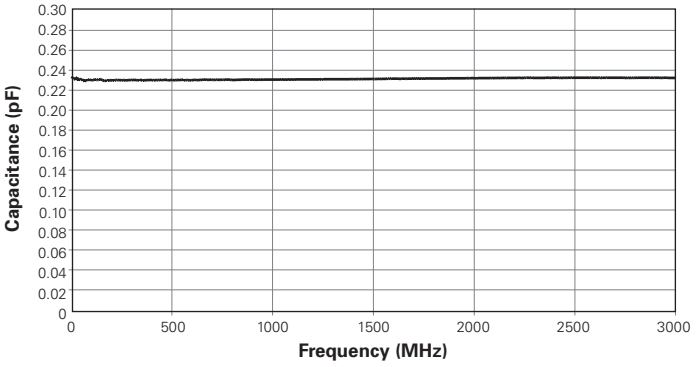

8

Figure E2 Eye Diagram Performance at 3.4 GHz for PESD Devices

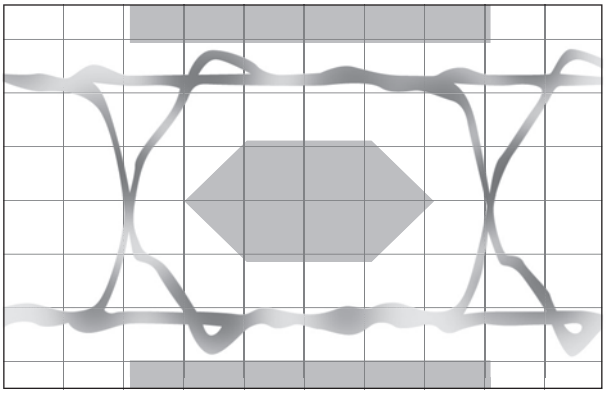

Figure E3 Insertion Loss Diagram for PESD Devices

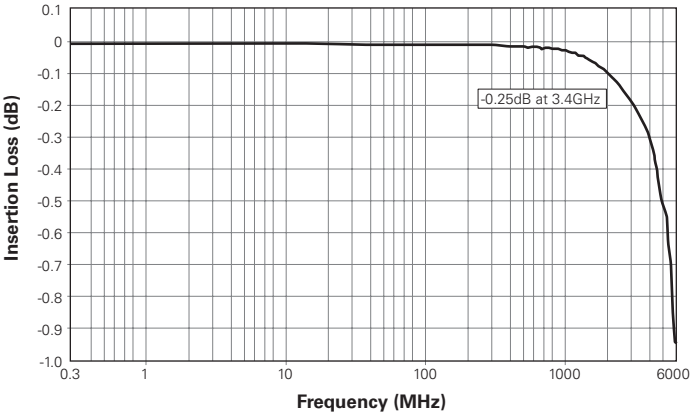

RoHS Compliant, ELV Compliant HF Halogen Free

Figures E4-E5 PESD Device Protection for HDMI (PESD devices provide electrostatic discharge protection)

Figure E4

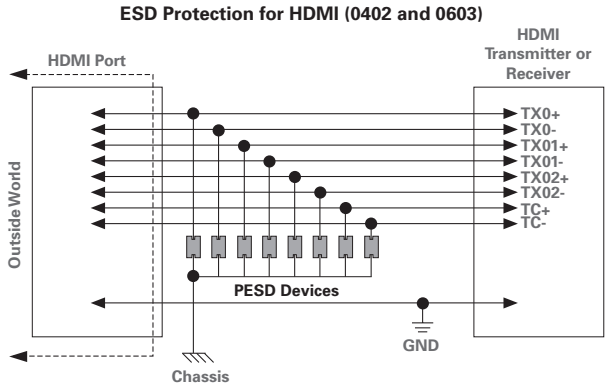

Figure E5

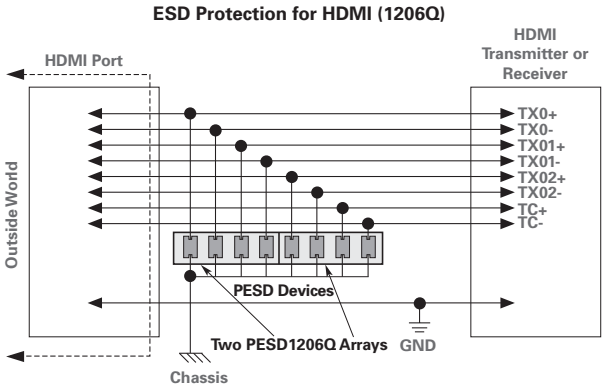

Table E2 Dimensions for PESD Devices in Millimeters and (Inches*)

	A		B		C		D		E		F		
Part Number	**Min**	**Max**	**Min**	**Max**	**Min**	**Max**	**Min**	**Max**	**Min**	**Max**	**Min**	**Max**	**Figure**
PESD0402-140	0.90	1.10	0.23	0.43	0.10	0.30	0.40	0.60	—	—	—	—	E6
	(0.035)	(0.043)	(0.009)	(0.017)	(0.004)	(0.012)	(0.016)	(0.024)					
PESD0603-240	1.50	1.70	0.45	0.55	0.10	0.50	0.70	0.95	—	—	—	—	E6
	(0.059)	(0.067)	(0.018)	(0.022)	(0.004)	(0.020)	(0.028)	(0.037)					
PESD1206Q-240	3.10	3.30	0.40	0.60	0.10	0.30	1.50	1.70	0.20	0.60	0.20	0.60	E7
	(0.122)	(0.130)	(0.016)	(0.024)	(0.004)	(0.012)	(0.059)	(0.067)	(0.008)	(0.024)	(0.008)	(0.024)	

*The dimensions in inches are rounded approximations.

Figure E6

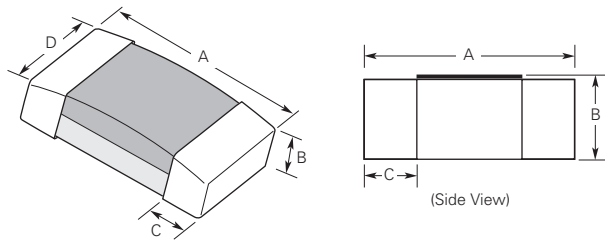

(Drawing not to Scale)

Figure E7

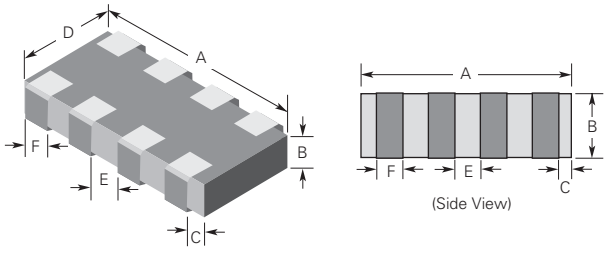

(Drawing not to Scale)

Table E3 Environmental Specifications for PESD Devices

	Test Conditions	**Pass / Fail Criteria**
Bias Humidity Test	85°C, 85% RH, $V_{DC\ (max)}$, 1000 hrs	$I_L \leqq 10\ \mu A$
Thermal Shock	-55°C to 125°C, 30 min Dwell, 1000 Cycles	$I_L \leqq 10\ \mu A$
Bias Heat Test	125°C, $V_{DC\ (max)}$, 1000 hrs	$I_L \leqq 10\ \mu A$
Bias Low Temp Test	-55°C, $V_{DC\ (max)}$, 1000 hrs	$I_L \leqq 10\ \mu A$
Solderability	250°C ± 5°C, 3 ±1s	95% Coverage
Solder Heat	260°C, 10s	90% Coverage
Vibration	10 to 50Hz, 60s Cycle, 2 hrs Each in X-Y-Z-Direction	No Physical Damage
Solvent Resistance	IPA Ultrasonic 300s	No Physical Damage
Shock	1500G, 0.5ms Each, X-Y-Z Axis 3 Times Each Axis	No Physical Damage

Table E4 General Characteristics for PESD Devices

Storage Temperature	-40°C to +85°C
Operating Temperature	-55°C to +125°C
ESD Voltage Capability (Tested per IEC 61000-4-2)	Contact Discharge Mode: 8kV (Typ), 15kV (max) Air Discharge Mode : 15kV (Typ), 25kV (max) [1 Pulse: per Customer Request]
ESD Pulse Withstand	100 Pulses (Tested per IEC 61000-4-2, Level 4, Contact Method)

Table E5 Materials Information for PESD Devices

RoHS Compliant	Directive 2002/95/EC Compliant
RoHS 2.0	Directive 2011/65/EU Compliant
ELV Compliant	Directive 2000/53/EC Compliant
Halogen Free	Halogen Free Refers to: Br≤900ppm, Cl≤900ppm, Br+Cl≤1500ppm

Table E6 Recommended Pad Layout for PESD Devices in Millimeters and (Inches*)

	V		W		X		Y		Z		
Part Number	**Min**	**Max**	**Min**	**Max**	**Min**	**Max**	**Min**	**Max**	**Min**	**Max**	**Figure**
PESD0402-140	—	—	0.60	0.70	0.30	0.40	0.80	0.90	2.10	2.20	E8
			(0.024)	(0.028)	(0.012)	(0.016)	(0.031)	(0.035)	(0.083)	(0.087)	
PESD0603-240	—	—	0.90	1.00	0.50	0.60	1.00	1.10	2.70	2.80	E8
			(0.035)	(0.039)	(0.020)	(0.024)	(0.039)	(0.043)	(0.106)	(0.110)	

	V	W	X	Y	Z	
Part Number	**Typ**	**Typ**	**Typ**	**Typ**	**Typ**	**Figure**
PESD1206Q-240	3.20	2.20	0.50	0.80	1.00	E9
	(0.126)	(0.087)	(0.020)	(0.031)	(0.039)	

*The dimensions in inches are rounded approximations.

Figure E8

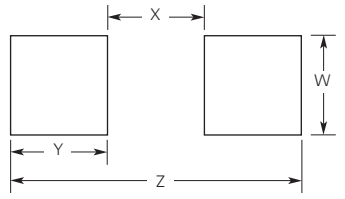

Figure E9

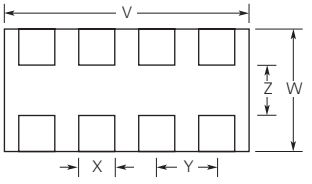

Note: Solder thickness 0.15 to 0.2mm.

Table E7 Solder Reflow Recommendations for PESD Devices

A	Temperature Ramp-up 1	From Ambient to Preheating Temperature	30s to 60s
B	Preheating	140°C - 160°C	60s to 120s
C	Temperature Ramp-up 2	From Preheating to Main Heating Temperature	20s to 40s
D	Main Heating	at 200°C at 220°C at 240°C at 260°C	60s to 70s 50s to 60s 30s to 40s 5s to 10s
E	Cooling	From Main Heating Temperature to 100°C	4°C/s max

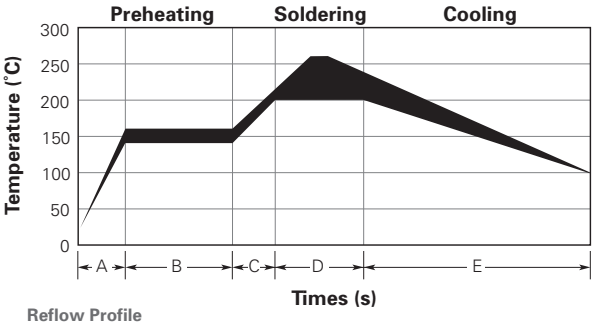

Reflow Profile

RoHS Compliant, ELV Compliant HF Halogen Free

Table E8 Tape Specifications for PESD Devices

Tape Dimension	0402		0603		1206Q	
EIA Mark	Dimension (mm)	Tolerance	Dimension (mm)	Tolerance	Dimension (mm)	Tolerance
W	8.00	±0.30	8.00	±0.30	8.00	±0.30
P_0	4.00	±0.10	4.00	±0.10	4.00	±0.10
P_1	2.00	±0.05	4.00	±0.05	4.00	±0.05
P_2	2.00	±0.05	2.00	±0.05	2.00	±0.05
A_0	0.69	±0.05	1.27	±0.15	2.02	±0.20
B_0	1.19	±0.05	2.02	±0.20	3.62	±0.20
D_0	1.50	±0.10	1.50	±0.10	1.50	±0.10
F	3.50	±0.05	3.50	±0.05	3.50	±0.05
E_1	1.75	±0.10	1.75	±0.10	1.75	±0.10
T	0.48	±0.03	0.60	±0.03	0.75	±0.03

Figure E10

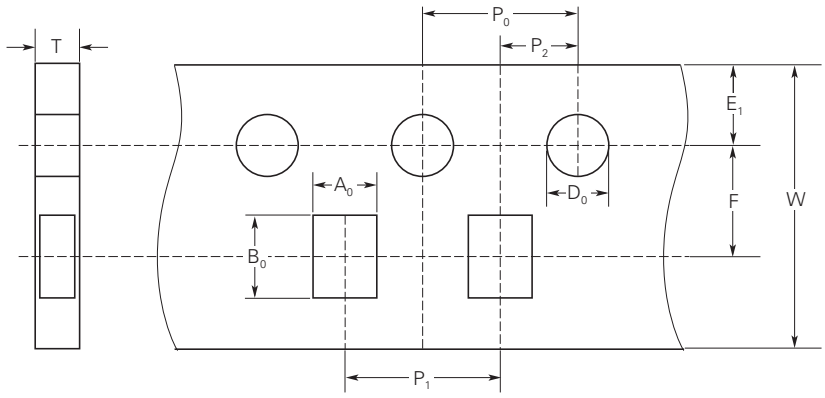

Table E9 Reel Specifications for PESD Devices

Reel Dimensions (0402, 0603 & 1206Q)	
EIA Mark	Dimension (mm)
A max	180.0
N min	60.5
W_1 max	9.5
W_2 max	14.0

Figure E11

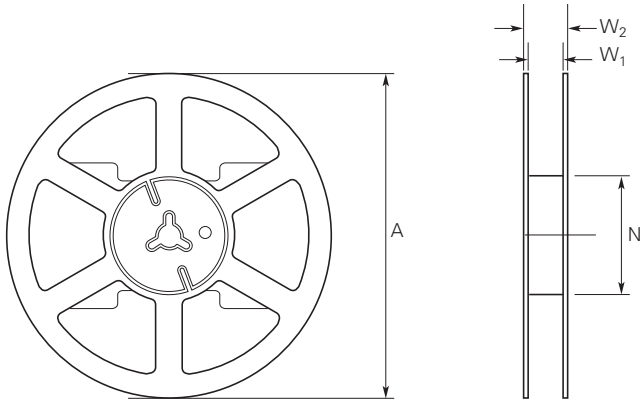

Parameter Definitions for PESD Devices

Operation Voltage (V_{DC})

Defined as DC voltage, under which device is in OFF state and leakage current below certain threshold.

Leakage Current (I_L)

Current through device under Operation Voltage V_{DC}.

Trigger Voltage (V_T)

Voltage at which the device switches from the OFF to the ON state, during the IEC waveform or the TLP system.

Clamping Voltage (V_C)

Voltage cross device under 8kV per IEC or measured by TLP system. Typically measured 30ns after initiation of the ESD pulse (for TLP, both 30ns and 60ns are sometimes used).

Capacitance (C_P)

Capacitance of the device measured at 1MHz with 0V and max operating voltage bias.

Part Numbering System for Polymer ESD (PESD) Devices

PESD xxxx Q - 240

- **240** — **Operating Voltage Designator**
  - **14 x 10° = 14V_{DC}**
  - **24 x 10° = 24V_{DC}**
- **Q** — **Package Type**
  - **Q - Array of 4 Elements**
- **xxxx** — **EIA Size**
- **PESD** — **Series**

8

⚠ Warning :

Application Limitations for PESD0402-140, PESD0603-240 and PESD1206Q-240: These parts are not intended to be used on power lines or for power bus applications. Users should independently evaluate the suitability of and test each product selected for their own application.

Notice :

Information furnished is believed to be accurate and reliable. However, users should independently evaluate the suitability and test each product selected for their own applications. Tyco Electronics Corporation and its affiliates in the TE Connectivity Ltd. group of companies ("TE") reserves the right to change or update, without notice, any information contained in this publication; to change, without notice, the design, construction, processing, or specification of any product; and to discontinue or limit production or distribution of any product. This publication supersedes and replaces all information previously supplied. Without express written consent by an officer of TE, TE does not authorize the use of any of its products as components in nuclear facility applications, aerospace, or in critical life support devices or systems. TE expressly disclaims all implied warranties regarding the information contained herein, including, but not limited to, any implied warranties of merchantability or fitness for a particular purpose. TE's only obligations are those in the TE Standard Terms and Conditions of Sale and in no case will TE be liable for any incidental, indirect, or consequential damages arising from the sale, resale, use, or misuse of its products.

RoHS Compliant, ELV Compliant HF Halogen Free

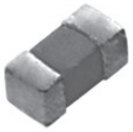

ChipSESD Devices

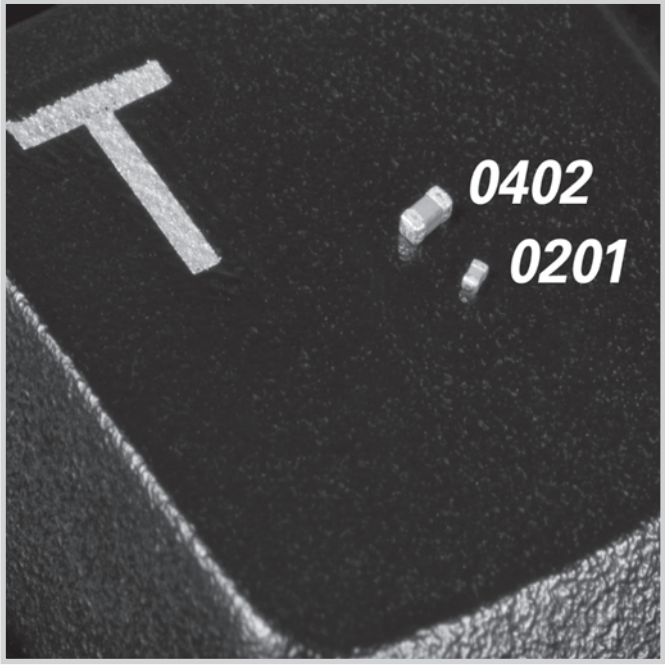

TE Circuit Protection's ChipSESD family of Silicon ESD devices, available in EIA-0201 and EIA-0602 sized rectangular SMT passive component packages, can help protect electronic circuits against damage from electrostatic discharge (ESD) events.

The SESD0201P1BN-0400-090, 0201-sized ChipSESD device's miniature footprint (0.6mm x 0.3mm x 0.3mm) is approximately 70% smaller than prior-generation devices. This offers designers flexibility in space-constrained applications.

The ChipSESD devices are high-capacitance, bi-directional devices that can be used for low-speed generic interfaces such as keypads, power buttons, speakers and microphone ports in a portable electronics. The bi-directional operation eliminates orientation constraints and the need for polarity inspections. The surface mount technology (SMT) passive component package allows the devices to be easily installed onto the printed circuit board using the standard PCB assembly process. Once soldered onto the boards, the ChipSESD's solder fillets at the end terminals can easily be visually inspected.

The ChipSESD devices offer 10kV contact and 16kV air discharge protection per the IEC61000-4-2, level 4 standard with a surge rating of 2A under 8x20μs pulse.

Benefits

- Silicon ESD devices in an EIA-0201 and EIA-0402 sized rectangular SMT passive component package
- Bi-directional operation eliminates orientation constraints
- Standard PCB assembly and rework process
- ESD protection in space-constrained portable electronics and mobile handsets
- Helps protect electronic circuits against damage from ESD
- Assists equipment to pass IEC61000-4-2, level 4 testing

Features

- Input capacitance - 4.5pF (typ)
- Low leakage current – 1.0μA (max)
- Low working reverse voltage - 6.0V (max)
- Capable of withstanding numerous ESD strikes
- RoHS compliant
- Halogen free
  (refers to: Br≤900ppm, Cl≤900ppm, Br+Cl≤1500ppm)

Applications

- Mobile phones and portable electronics
- Digital cameras and camcorders
- Notebooks, set top boxes, motherboards
- USB 2.0 and computer I/O ports
- Applications requiring high ESD performance in a small package

Table CE1 Maximum Ratings for ChipSESD Devices

Part Number	IEC61000-4-2, level 4 (ESD Withstand) Contact (kV)	Air (kV)	Temperature Operating (°C)	Storage (°C)
SESD0201P1BN-0400-090	±10*	±16	-40 to +125	-40 to +125
SESD0402P1BN-0450-090	±10*	±16	-40 to +125	-40 to +125

*10kV @ 50 ± pulses under IEC61000-4-2; 8kV @ 1,000 pulses under IEC61000-4-2

Table CE2 Electrical Characteristics @T=25°C for ChipSESD Devices

Part Number	Input Capacitance* Typ (pF)	Max (pF)	Leakage Current (max) I_L @ V_{RWM} = 6.0V (µA)	Breakdown Voltage (min) V_{br} @ I_T† = 1mA (V)	Working Reverse Voltage V_{RWM} @ peak (V)	Clamping Voltage (typ) V_{CL} @ Ipp=2A, tp=(8/20µs) (V)*
SESD0201P1BN-0400-090	4.0	5.0	1.0	9.0	6.0	+10.0
SESD0402P1BN-0450-090	4.5	5.5	1.0	9.0	6.0	+10.0

* @ Vr=0V, f=1MHz
† V_{br} is measured at test current I_T

Figure CE1 ESD Clamping Voltage — 8kV Contact for ChipSESD Devices

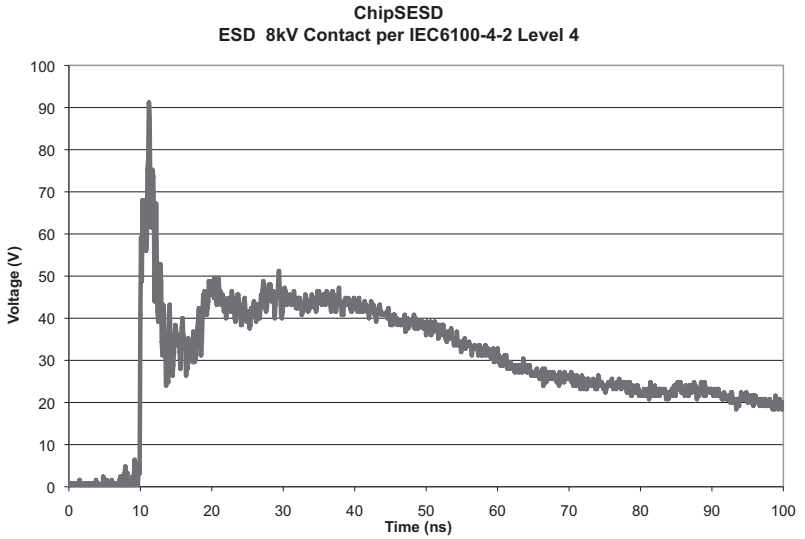

Figure CE2 ESD Clamping Voltage — 8x20µs, 2A Surge for ChipSESD Devices

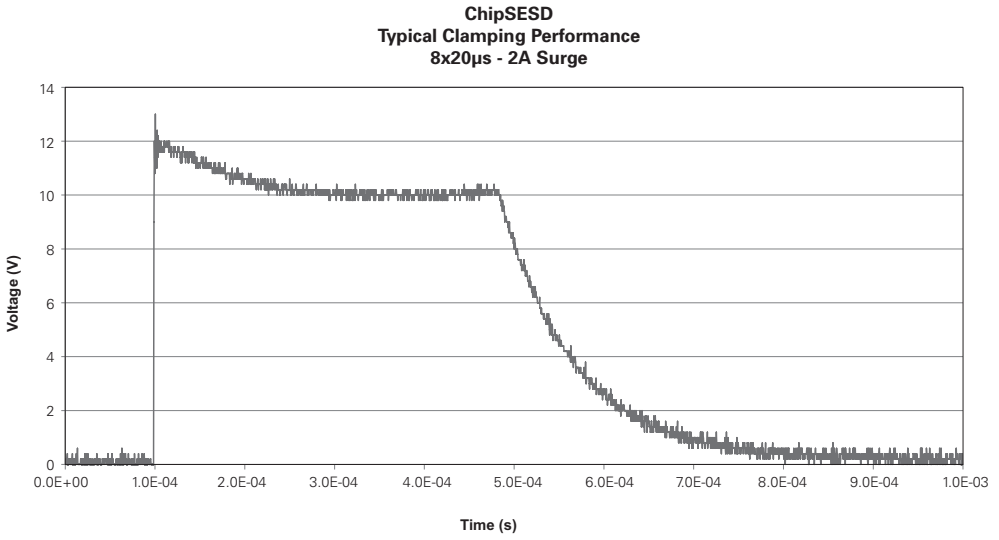

RoHS Compliant, ELV Compliant HF Halogen Free

Table CE3 Dimensions for ChipSESD Devices in Millimeters and (Mils)*

Part Number	A	B	C	D	Figure
SESD0201P	0.60 ± 0.05	0.30 ± 0.05	0.30 ± 0.05	0.21 ± 0.07	CE3
	(23.62 ± 2.00)	(11.81 ± 2.00)	(11.81 ± 2.00)	(8.27 ± 2.80)	
SESD0402P	1.10 ± 0.10	0.50 ± 0.10	0.50 ± 0.10	0.25 ± 0.15	CE3
	(43.31 ± 0.40)	(19.69 ± 4.00)	(19.69 ± 4.00)	(9.84 ± 6.00)	

* Round off approximation

Figure CE3

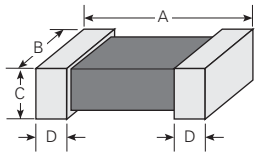

Table CE4 PCB Pad Layout for ChipSESD Devices in Millimeters and (Mils)*

Part Number	L	S	W	Figure
SESD0201P	0.28 ± 0.01	0.19 ± 0.01	0.30 ± 0.01	CE4
	(11.00 ± 0.40)	(7.50 ± 0.40)	(11.80 ± 0.40)	
SESD0402P	0.61 ± 0.05	0.52 ± 0.05	0.50 ± 0.05	CE4
	(24.00 ± 2.00)	(21.00 ± 2.00)	(20.00 ± 2.00)	

* Round off approximation

Figure CE4

Recommended Landing Pattern

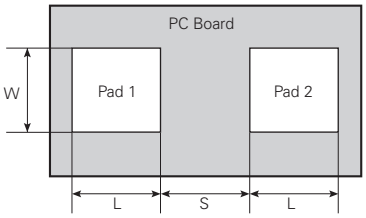

ChipSESD Devices Can be Oriented Either Direction

Table CE5 Tape Specifications for ChipSESD Devices

Tape Dimension EIA Mark	SESD0201P1BN-0400-090 Dimension (mm)	SESD0402P1BN-0450-090 Dimension (mm)
A	0.35 ± 0.02	0.58 ± 0.03
B	0.67 ± 0.02	1.20 ± 0.03
D	1.55 ± 0.05	1.55 ± 0.05
E	1.75 ± 0.05	1.75 ± 0.05
F	3.50 ± 0.05	3.50 ± 0.05
W	8.00 ± 0.10	8.00 ± 0.10
P_0	4.00 ± 0.10	4.00 ± 0.10
P_1	2.00 ± 0.05	2.00 ± 0.05
P_2	2.00 ± 0.05	2.00 ± 0.05
T	0.42 ± 0.03	0.60 ± 0.03

Figure CE5

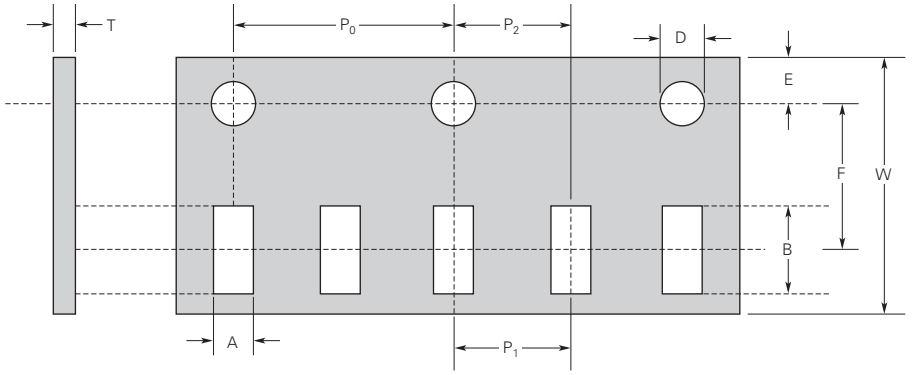

Table CE6 Reel Specifications for ChipSESD Devices

Reel Dimension EIA Mark	Dimension (mm)
A	178.0 ± 2.0
B	2.0 ± 0.5
C	13.0 ± 0.5
D	21.0 ± 0.8
E	62.0 ± 1.5
F	9.0 ± 0.5
G	13.0 ± 1.0

Figure CE6

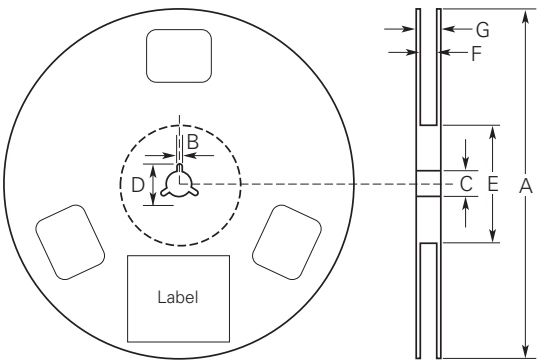

RoHS Compliant, ELV Compliant HF Halogen Free

Definition of Terms for ChipSESD Devices

I_L	Reverse Leakage Current @ V_{RWM}
V_{RWM}	Working Peak Reverse Voltage
V_{br}	Breakdown Voltage @ I_T
I_T	Test Current
V_{CL}	Clamping Voltage

Part Numbering System for ChipSESD Devices

SESD 0201 P1BN - 0400 - 090

- **Breakdown Voltage (min)**
  090 = 9.0V
- **Input Capacitance (typ)**
  0400 = 4.0pF
  0450 = 4.5pF
- **N - No Common Pin**
- **B - Bi-directional**
- **1 - One Channel**
- **Package**
  P - Packaged SMD
- **EIA Size**
  0201
  0402
- **Series**
  Silicon ESD

Notice :

Information furnished is believed to be accurate and reliable. However, users should independently evaluate the suitability and test each product selected for their own applications. Tyco Electronics Corporation and its affiliates in the TE Connectivity Ltd. group of companies ("TE") reserves the right to change or update, without notice, any information contained in this publication; to change, without notice, the design, construction, processing, or specification of any product; and to discontinue or limit production or distribution of any product. This publication supersedes and replaces all information previously supplied. Without express written consent by an officer of TE, TE does not authorize the use of any of its products as components in nuclear facility applications, aerospace, or in critical life support devices or systems. TE expressly disclaims all implied warranties regarding the information contained herein, including, but not limited to, any implied warranties of merchantability or fitness for a particular purpose. TE's only obligations are those in the TE Standard Terms and Conditions of Sale and in no case will TE be liable for any incidental, indirect, or consequential damages arising from the sale, resale, use, or misuse of its products.