PolySwitch Strap Devices Help Protect Rechargeable Battery Packs

Rechargeable battery packs, such as those used to power mobile phones, digital cameras and other handheld devices, are particularly sensitive to overcurrent and overtemperature conditions caused by accidental shorting and abusive or runaway charging. These conditions can raise the battery temperature and may result in cell damage, equipment failure or even venting or smoke.

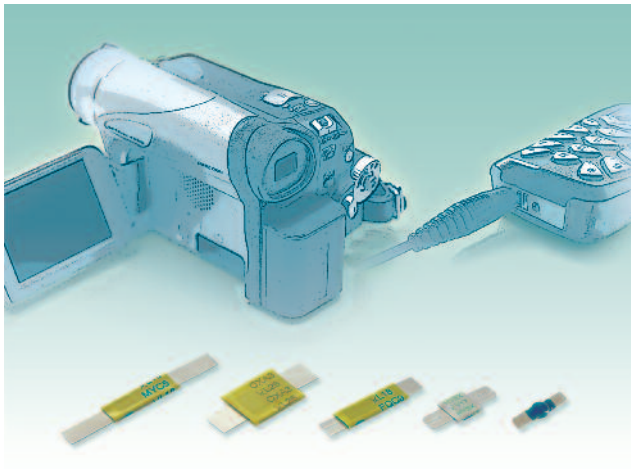

The principal electrical hazards faced by battery packs are the result of external short circuits during discharge, or an overcharge situation caused by using a faulty or incorrect charger. Internal pack faults are less common, but a failure in any of the complex electronics that support features, such as fuel gauging or charge control, can increase the risk. Such conditions can result in a significant overtemperature event either inside or outside the pack.

Short-Circuits During Discharge

An unprotected battery pack can typically deliver up to 100A of short-circuit current when “hard” shorted by a low resistance element. Power dissipated in the battery cell’s internal impedance leads to a rise in cell temperature. The severity will depend on the pack’s thermal characteristics and the battery cell chemistry.

Accidental short circuits can occur when a metal object, such as a keychain, bridges the exposed terminals of the battery pack. These short circuits can raise temperatures high enough to damage the cell, other components or surrounding materials. At a minimum, pack performance can deteriorate and, with some packs, thermal runaway may occur, resulting in venting or smoke.

If an unprotected pack is “soft” shorted by an element with some resistance, for example a few hundred milliohms, the hazard changes from being power dissipated in the cell to power dissipated in the shorting element. Tests have shown that the resistive shorting element can reach temperatures in excess of 600°C in this type of situation, and may result in ignition of adjacent combustible materials.

Battery Pack Overcharge

Individual battery chemistries require specific charging profiles to optimize performance and minimize hazards. If this profile is not met, an overcharge condition may occur. A battery pack overcharge condition is most often caused by:

- A runaway charging condition in which the charger fails to stop supplying current to the pack once it is fully charged. This is typically caused by a charger fault.

- Abusive charging occurs when the pack is charged under the wrong conditions by an incorrect or faulty charger. The most likely cause of this condition is using an aftermarket or non-compatible charger. Product reliability or safety issues may arise, due to the use of some aftermarket products, because of the proprietary nature of cell chemistries and charger designs.

Battery cell overcharge can result from an overcurrent or overvoltage condition or a combination of both. If current or voltage is allowed to exceed prescribed values, a significant rise in cell temperature may result.

During a typical overcharge fault, the cell temperature rises when excessive voltage across the fully charged cell causes chemical degradation of the cell components. When a PPTC (polymeric positive temperture coefficient) device, such as a PolySwitch device is included in the circuit, the ambient temperature of the PPTC device increases accordingly, as the cell temperature rises, and less current is required to trip the device.

Li-ion and Li-Polymer Pack Design and Device Selection

Figure 1 shows a schematic of a typical single-cell Li-ion battery pack for a mobile phone application. Li-ion packs typically include an active overvoltage, undervoltage and overcurrent detecting safety circuit (IC and MOSFETs) as the primary pack protection and a PPTC device in series as a second level of protection.

Although the semiconductor circuitry is considered reliable, there are conditions under which failure of the primary protection may occur, such as excessive electrostatic discharge, high temperature, or oscillation during a short circuit condition. In these cases, the PPTC device helps provide cell overtemperature protection on charge and discharge, as well as redundant overcurrent protection.

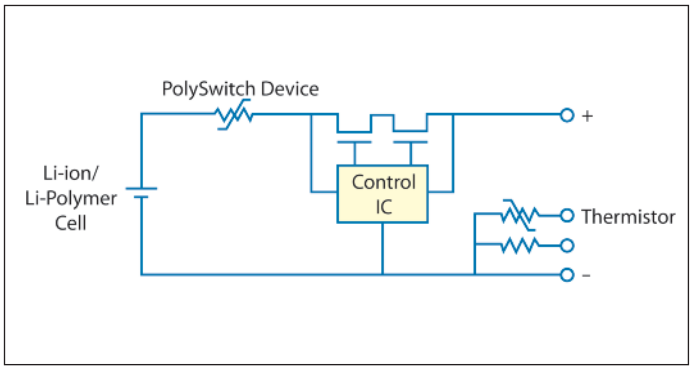

Figure 1. Typical single-cell Li-ion battery pack circuit protection scheme.

The protection requirement is cell chemistry-dependent and precise protection requirements should be obtained from the cell manufacturer. Ultimately, pack designers must decide what level of protection is required for their applications and only a system test can determine whether or not a specific protection device is appropriate. Recommendations from device manufacturers are useful in narrowing protection options and benchmarking other pack protection schemes may provide a good lead for further investigation. However, specific testing of each protection option is the best way to evaluate its effectiveness.

For Li-ion and Li-Polymer based packs, a PolySwitch VTP, VLR, VLP or MXP strap device is recommended. The PolySwitch device's low resistance helps overcome the additional series resistance introduced by the MOSFETs and the device's low trip temperature helps provide protection against thermal runaway in the case of an abusive overcharge. Unlike surface-mount devices, the strap is welded to the cell body, which helps improve heat transfer from an overheating cell to the PolySwitch device for faster thermal sensing.

PolySwitch devices are available in a variety of form factors and current ratings. They are designed for specific battery chemistries or usage profiles. The evolution of these devices has been in the direction of lower resistance, smaller form factors and better thermal protection as shown in Figures 2 & 3.

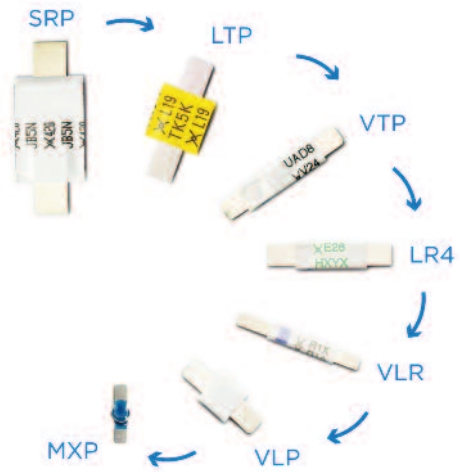

Figure 2. A wide range of PolySwitch strap devices are available for specific pack requirements.

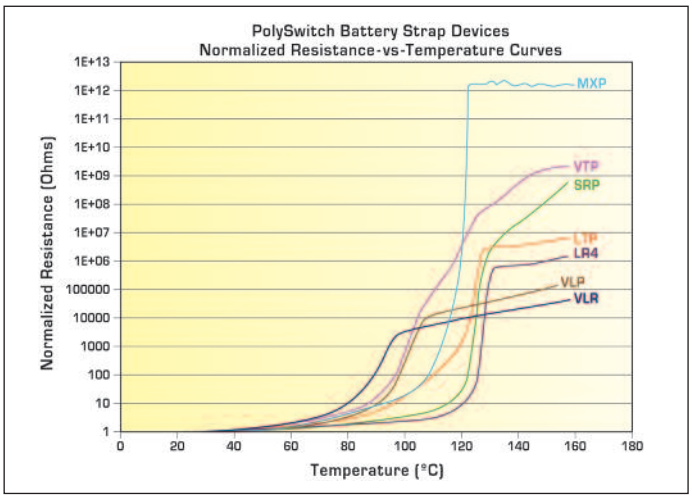

Figure 3. A unique range of PPTC materials enables current to be interrupted at different ambient temperatures.

Clearly, the trend toward more space efficient packs requires smaller protection devices. Also, locating protection circuitry in close proximity to the cell helps eliminate the need for long metal interconnects and helps improve thermal sensing.

The latest generation of PolySwitch devices for mobile phone applications was specifically designed for use under the PCB. The PolySwitch MXP strap device, shown in Figure 4, incorporates conductive metal particles to achieve lower resistance than traditional carbon black filled PPTC devices. In comparison with the prior generation VTP strap device, shown in Figure 5, the MXP device has approximately the same hold current at 60˚C. However, the MXP device is 88% smaller in size and 68% lower in resistance.

Regardless of the pack chemistry, device hold current is selected on the basis of the maximum average charge or discharge current and takes into account the maximum operating temperature. The form factor will depend on the available space within the pack. A wide range of PolySwitch strap devices is available to help pack designers meet specific application requirements.

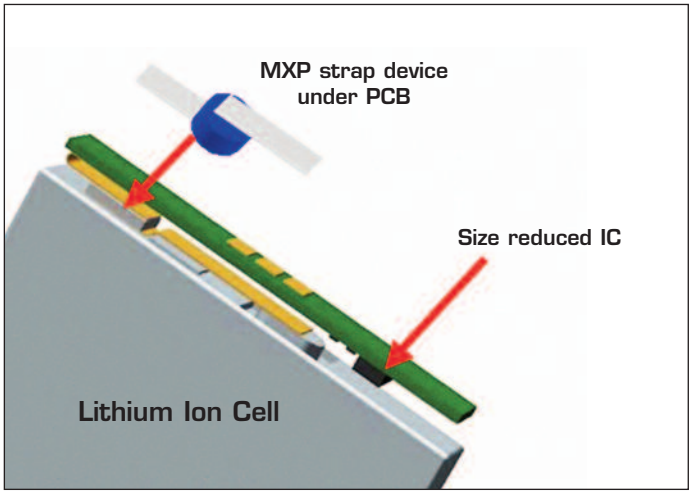

Figure 4. The PolySwitch MXP strap device is designed for use under the PCB.

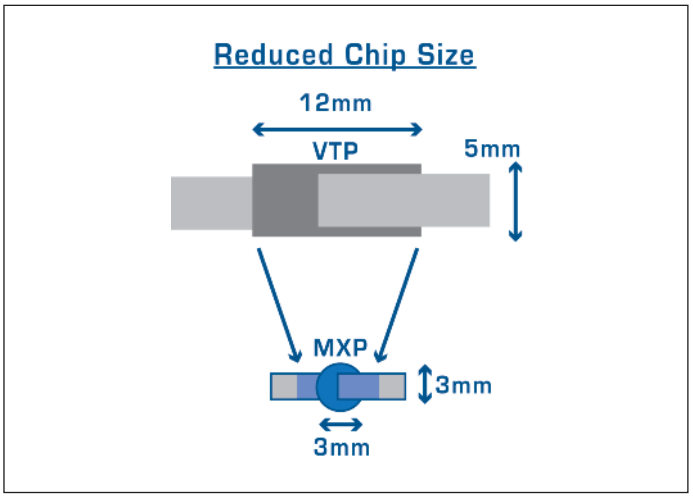

Figure 5. The PolySwitch MXP device provides lower resistance in a smaller form factor. (Note: Dimensions refer to the chip size only. Strap length and configuration can be customized per customer requirements.)

Safety and Performance Standards

UL has established test requirements for battery pack resilience to both short-circuit and overcharge events under UL2054, "Standard for Household and Commercial Batteries." In addition, the IEEE 1725-2006 "Standard for Rechargeable Batteries in Cellular Telephones" covers Li-ion battery pack circuit protection considerations in mobile phones.

Further details and exact test conditions can be found in the UL and IEEE specifications.

During a short-circuit fault, the PPTC device rapidly produces heat due to the excess current. As it nears trip temperature, the device increases in resistance by several orders of magnitude and limits the fault current to a low level. When the fault condition is removed and the power is cycled the device cools and returns to a low resistance state. If the fault is not cleared and the power is not cycled, the device will remain latched in the high resistance state.

During a typical overcharge fault, cell temperature rises when excessive voltage across the fully charged cell causes chemical degradation of cell components. When a PolySwitch device is included in the circuit, as the cell temperature rises, the ambient temperature of the PolySwitch device increases accordingly and less current is required to trip the device.

PolySwitch devices are often used to replace bimetal or thermal fuse protectors. Bimetals are often bulky, higher cost protectors, which frequently do not latch in the protected position during a fault condition. This may result in battery pack fault and battery cell damage.

One-shot secondary overcurrent protectors, such as thermal fuses, are difficult to set at the low temperatures required for charge protection and may trip at high ambient temperatures, disabling an otherwise functional pack and resulting in unnecessary field returns. Low-temperature PolySwitch devices are uniquely suited to limiting the charge current close to the functional pack's operating temperature.

The device's resettable functionality ensures that nuisance tripping caused by exposure to high storage temperatures, such as leaving the phone inside a vehicle on a hot day, does not permanently disable the pack. Also, because the majority of fault conditions that a battery pack encounters are relatively infrequent or intermittent events, resettable protection is generally the preferred method.

TE Circuit Protection
308 Constitution Drive
Menlo Park, CA USA 94025-1164
Tel : (800) 227-7040, (650) 361-6900
Fax : (650) 361-4600

www.circuitprotection.com
www.circuitprotection.com.hk (Chinese)
www.te.com/japan/bu/circuitprotection (Japanese)

PolySwitch, TE Connectivity, TE connectivity (Logo) and TE (logo) are trademarks of the TE Connectivity Ltd. family of companies. Other logos, product and company names mentioned herein may be trademarks of their respective owners. All information, including illustrations, is believed to be accurate and reliable. However, users should independently evaluate the suitability of each product for their application. Tyco Electronics Corporation and/or its Affiliates in the TE Connectivity Ltd. family of companies ("TE") makes no warranties as to the accuracy or completeness of the information, and disclaims any liability regarding its use. TE's only obligations are those in the TE Standard Terms and Conditions of Sale and in no case will TE be liable for any incidental, indirect, or consequential damages arising from the sale, resale, use, or misuse of the product. Specifications are subject to change without notice. In addition, TE reserves the right to make changes without notification to Buyer — to materials or processing that do not affect compliance with any applicable specification.

©2011 Tyco Electronics Corporation, a TE Connectivity Ltd. company. All rights reserved. RCP0044E.0908