AUTOMOTIVE DEVICES

QUICK REFERENCE GUIDE

TE circuit protection devices offer protection for overcurrent, overvoltage and PCB trace faults for your vehicle's sensitive electronics.

Circuit Protection Automotive Devices

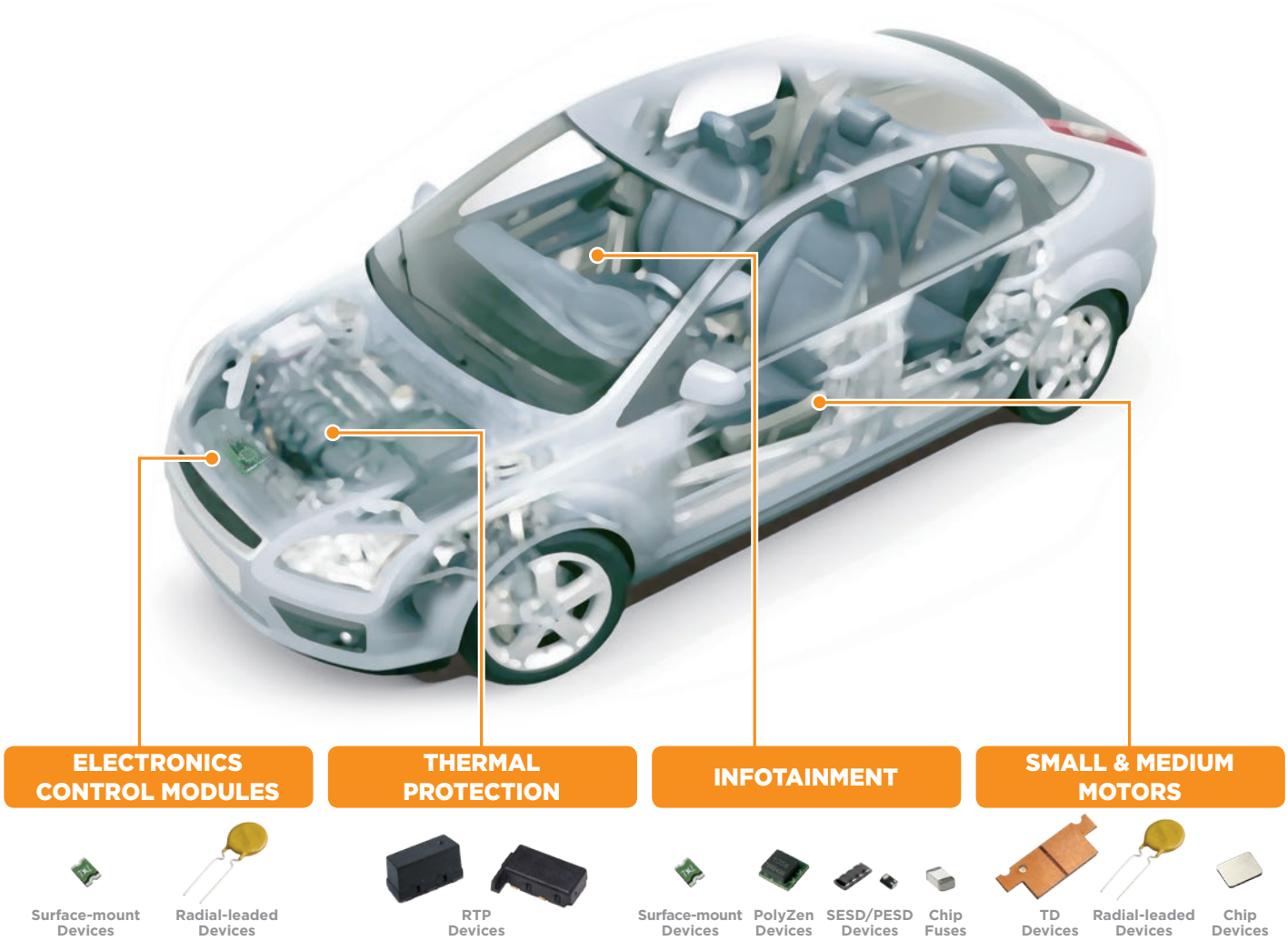

Applications

- Motor and motor control circuit protection including power doorlocks, mirrors, lumbar pumps, seats, sunroofs and windows
- Electronic Control Unit (ECU) I/O protection
- HVAC Motor and I/O protection
- Telematics, infotainment and navigations systems
- LCD back-light heaters and Wire Downsizing
- Power and cigarette lighter outlets, plugs and adapter/chargers
- Powered networks and busses
- Air-flow detection and overcurrent protection in HVAC and cooling fan systems
- Stall detection in express window and sunroof circuits
- Power distribution, electrical centers and junction box resettable overcurrent protection
- ESD damage, Load dump and other transient voltage protection
- Secondary thermal protection for component failure

Features

- Overcurrent, overvoltage and overtemperature circuit protection devices
- Resettable and single-use overcurrent devices
- Wide range of form factor and termination methods
- Products meet applicable automotive industry standards
- Devices compatible with high-volume electronics assembly

Benefits

- Expertise from the world's leading resettable overcurrent protection manufacturer
- High quality/reliability products from the world's largest passive component manufacturer
- Worldwide team dedicated to support automotive applications
- Wide range of dedicated automotive surface-mount and through-hole resettable overcurrent devices
- High performance transient voltage protection devices

PolySwitch PPTC Resettable Overcurrent Protection Devices

The PolySwitch Polymeric Positive Thermal Coefficient (PPTC) resettable devices helps reduce warranty costs and increases end-customer satisfaction. PolySwitch devices offer advantages over competitive technologies:

- PolySwitch devices are in-rush current tolerant. When using PolySwitch devices, lower current values are required, permitting wire size reductions with consequent harness cost, weight and volume savings
- PolySwitch devices work in coordination with the components they help protect, providing automatic temperature compensation
- PolySwitch devices can be installed permanently inside modules and motors, allowing intermittent use vehicle systems to be smaller and less costly
- PolySwitch devices typically do not require access; protection can be put where needed, without the necessity to loop back and forth to a fuse box
- When installed on a PCB, PolySwitch devices cannot readily be removed to disable warning alarms
- Unlike single-use fuses, PolySwitch devices cannot readily be substituted for an incorrect and often unsafe fuse rating
- PolySwitch solid state construction is more reliable than the mechanical contacts found in bimetal circuit-breakers

Special Product Ranges are Available for Automotive Applications That Meet the Latest Industry Standards

PolySwitch Radial-leaded Devices

TE PolySwitch through-hole devices represent a comprehensive and complete range of PPTC overcurrent protection for the car, truck and bus industries. TE Circuit Protection offers a wide range of devices all qualified to rigorous automotive standards (following the AECQ200 specification).

Features

- Current ratings up to 15A
- Voltage ratings up to $72V_{DC}$
- Compatible with high-volume, automatic insertion, electronic assembly processes
- Very low electrical resistance
- Broad range of through-hole polymeric PTC devices available with small current increments. Temperature range -40°C/+85°C or +125°C
- RoHS compliant, lead and halogen free

Benefits

- Can be used in applications that require current values up to 15A
- Devices available for both existing and future vehicle electrical systems (12V, 24V, 48V systems)
- Low installation cost
- Low voltage drop
- Many available electrical and physical sizes facilitate the most precise protection design. Can be designed in cabin or under-the-hood applications

PolySwitch Surface-mount Devices

For over 25 years PolySwitch SMD devices have proven their reliability and capability in helping to protect computer and consumer electronics against temporary overcurrent faults. The PolySwitch surface mount product family has been extended to include a range of devices, which are qualified to rigorous automotive standards (following the AECQ200 specification). As a result, they are suitable for protecting Electronic Control Units (ECUs) against damage from faults that would otherwise require costly, complete module replacement.

Features

- Current ratings up to 3A
- Voltage ratings up to $60V_{DC}$
- A wide range of current ratings available
- Small size down to 1608mm (0603 mils).
  Temperature range -40°C/+85°C or +125°C

Benefits

- Suitable for ECU I/O and trace protection
- Devices available for both current and future vehicle electrical systems (12V, 24V, 48V systems)
- Maximum design flexibility
- Minimizes circuit-board space, weight and cost.
  Can be designed in cabin or under-the-hood applications

Custom Shape PolySwitch devices for DC Motor Protection

PolySwitch devices have become the de facto standard for helping protect intermittent-use automotive motors. The ability to accommodate the physical and operational demands for each motor has made these devices ubiquitous in seat, window, sunroof and door-lock applications. Their solid state construction helps provide reliable operation for the life of the vehicle.

Features

- Reacts to both overcurrent and thermal failure mechanisms
- Time to activate can be tailored for each application
- No contacts to arc and erode
- Solid state construction
- Can be configured to react to changes in air-flow

Benefits

- Helps protect motors from stall damage
- Adaptable to normal motor operational cycles
- Very high cycle-life with near zero EMI transmission
- Shock and vibration resistant
- Fast reaction to fan stall in engine cooling and HVAC fan applications

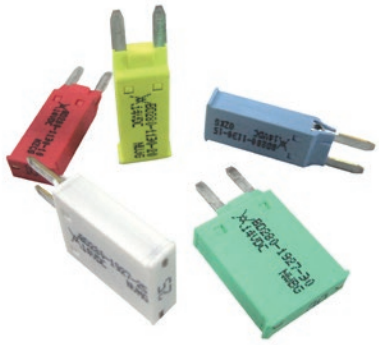

PolySwitch Bladed Devices

Useful in helping to provide resettable overcurrent protection for passenger vehicle and heavy truck wire harnesses, the PolySwitch bladed contact device features a 2.8mm and 5.4mm form factor to facilitate easy, one-to-one replacement of mini-sized fuses and Type II bimetal circuit protection devices in 12V vehicle systems.

Features

- 2.8mm and 5.4mm terminals
- Latches on first trip
- PTC resistance switching action
- Constant wattage power dissipation when tripped
- Solid state construction
- Probe points
- Bright color coded housing (based on hold current rating)
- Temperature range -40°C to 125°C

Benefits

- Easy to implement, reliable solid state resettable overcurrent protection
- Long, safe performance life
- Resilient at minimum and maximum voltage
- Resistance to shock and vibration and loads
- Facilitates fault finding
- Color recognition inspection possible
- Less chance of mis-installation
- Offers resettable overcurrent protection even in vehicle under-the-hood applications

Surface-mount Chip Fuses

A traditional single-use fuse is often preferred over a resettable device when, for instance, semiconductors fail short-circuit. TE Circuit Protection surface-mount fuses provide high current, small size surface-mount devices in both fast and slow-blow technologies. Clean blow characteristics contain the fusing event physically within the package with low arc effects.

Features

- Small sizes down to 1005mm (0402mm)
- Monolithic, multilayer design
- Temperature range -55°C to 125°C
- 0.5A to 30A current rating

Benefits

- Helps minimizes circuit-board space, weight and cost
- Resistance to shock and vibration
- Very good arc suppression characteristics
- Can be designed in under-the-hood applications
- High current for small size

ESD Protection Devices

High frequency applications often require a very low capacitance ESD protection solution such as TE Circuit Protection Silicon ESD devices. This is especially true in high speed data transmission applications (e.g. USB3.0, Thunderbolt, GPS, Bluetooth) where the SESD devices help protect the sensitive semiconductor components embedded in various automotive electronics equipment.

Features

- Extremely low capacitance - 0.10pF (typ. bi-di)
- Low leakage current - 50nA @5V (typ. single channel)
- Bidirectional clamping
- Low trigger voltage
- Low clamping voltage
  +10.0/-10.0V (typ. bi-di), +9.20/-0.80V (typ. uni-di) @ (tp=8x20µs, Ipp=2A)
- ESD – 20kV contact/air discharge per IEC61000-4-2
- Small size and low profile XDFN packages
- RoHS compliant, Pb and halogen free
  (refers to: Br ≤ 900ppm, Cl ≤ 900ppm, Br+Cl ≤ 1500ppm)

Benefits

- Suitable for high speed data transmission lines and radio frequency data lines (GPS, cell phone, Bluetooth, etc.)
- Low leakage results in a lower battery run-down rate
- Helps protect sensitive electronics against damage from ESD events and transients
- Helps minimize circuit-board space, weight and cost
- Resistant to shock and vibration
- Suitable for high temperature applications

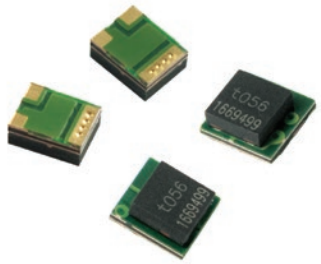

PolyZen Devices

PolyZen devices are polymer enhanced precision Zener diode micro-assemblies that help protect sensitive electronics from damage caused by inductive voltage spikes, voltage transients, use of incorrect power supplies and reverse bias. Well suited for cigarette lighter adaptor chargers, DC power port protection, cell phone charger port and infotainment power.

Features

- Overvoltage transient suppression
- Hold currents up to 2.6A
- Time delayed, overvoltage trip
- Time delayed, reverse bias trip
- Power handling on the order of 30 Watts
- Integrated device construction
- RoHS compliant and halogen free

Benefits

- Helps shield downstream electronics from overvoltage and reverse bias
- Trip events shut out overvoltage and reverse bias sources
- Analog nature of trip events minimizes upstream inductive spikes
- Helps reduce design costs with single component placement and minimal heat sinking requirements

High-Current RTP (HCRTP) Devices

The Reflowable Thermal Protection (RTP) device is a low-resistance, robust surface mountable thermal protector. The High-Current RTP (HCRTP) is specifically geared to automotive applications where it can help designers comply with AECQ standards. The HCRTP device has a set open temperature and can be installed using reliable, lead-free, Surface Mount Device (SMD) assembly and reflow processes. The device's high-current capability of 90A at 23°C helps provide protection against thermal runaway for power FETs and other components if failure occurs in applications such as ABS modules, glow plugs and engine cooling fans.

Features

- Opens at temperature (210°C) below the critical thermal threshold
- Prior to activation, it withstands lead (Pb)-free solder reflow processes with peak temperatures up to 260°C without opening
- Low series resistance
- DC interrupt voltage capable
- Robust design for harsh environment tested per stringent qualification specifications
- RoHS compliant, lead and halogen free

Benefits

- Helps prevent failed components from smoking, and or desoldering in case of a thermal event
- Allows use of standard surface-mount production methods with no special assembly costs
- Results in low power dissipation and voltage drop in applications
- Supports DC electronic circuits
- Suitable for high-power, high-current automotive applications
- Enables green designs
- Complies with automotive AECQ standards, including vibration test

Automotive Application Solution Guide

		Overcurrent Circuit Protection				Overvoltage Circuit Protection	Overtemperature Protection	Hybrid Protection
	APPLICATIONS	PolySwitch Devices	Slow-blow Chip Fuses	Fast-acting Chip Fuses	SESD Devices	PESD Devices	RTP Devices	PolyZen Devices
AUTOMOTIVE	ABS Systems	•	•	•			•	
	Antenna	•				•		
	Cigarette Lighter Accessories	•	•	•				•
	Displays	•	•	•	•	•		
	Electronic Control Units	•	•	•	•	•	•	•
	HVAC and Climate Control	•	•				•	
	Infotainment and Navigation Systems	•	•	•	•	•	•	•
	Motors	•	•					
	Wire Harness	•	•					
	EV BMS	•	•	•				

Automotive Application Examples

Navigation and Infotainment System

Driver-side Console

Driver-side Console

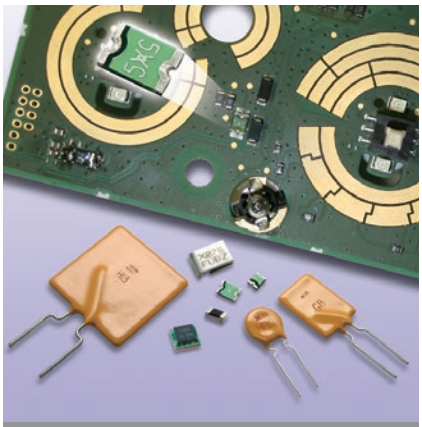

Electronic Control Units

Junction Box

DC Cigarette Lighters and Power Plug Adapters

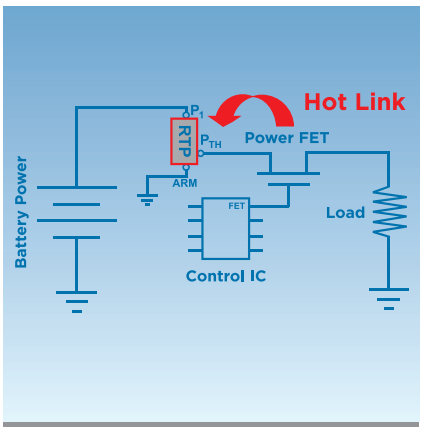

MOSFET Thermal Runaway Protection

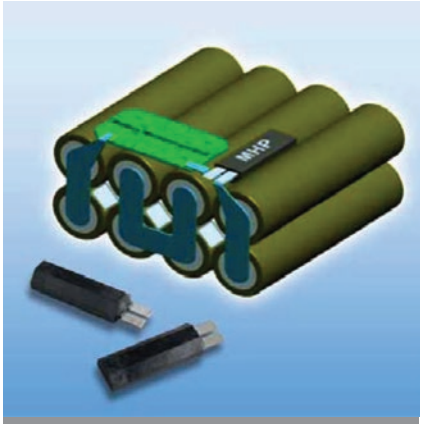

Series Battery Secondary Protection

Relay Overcurrent Protection

For More Information

TE Circuit Protection

308 Constitution Drive
Menlo Park, CA USA 94025-1164
Tel : (800) 227-7040, (650) 361-6900
Fax : (650) 361-4600

www.circuitprotection.com
www.circuitprotection.com.cn (Chinese)
www.te.com/japan/bu/circuitprotection/ (Japanese)

Brazil
Tel : 55-21-3958-0937
Email: Genaro.Maldonado@te.com

UK / Ireland / Benelux / Israel / South Africa / France / Italy / Portugal / Turkey / Greece / Spain
Tel : 33-1-34208455
Fax : 33-1-34208479
Email: contact_emea_cpd@te.com

Germany / Austria / Switzerland / Baltic / Eastern Europe / Nordic / Others
Tel : 49-89-6089485
Fax : 49-89-6089394
Email: contact_emea_cpd@te.com

Japan
Tel : 81-44-844-8194
Fax : 81-44-844-8040
Email: jpnpoly@te.com

Korea
Tel : 82-2-3415-4654
Fax : 82-2-3486-1786
Email: zokim@te.com

Taiwan
Tel : 886-2-2171-5213
Fax: 886-2-8768-1277
Email: monica.chen@te.com

China, Hong Kong
Tel : 852-2738-8181
Fax : 852-2735-0243
Email: yimmui.lo@te.com

China, Beijing
Tel : 86-21-6106-7597
Fax : 86-21-6485-3255
Email: kiko.long@te.com

China, Shanghai
Tel : 86-21-6106-7379
Fax : 86-21-6485-3255
Email: vivian.xu@te.com

China, Shenzhen / Guangzhou
Tel : 86-755-2515-4780
Fax : 86-755-2598-0419
Email: sammi.zhao@te.com

Thailand / Malaysia / Vietnam
Tel : 60-4-810-2112
Mobile: 60-19-472-5628
Fax : 60-4-6433288
Email: patrick.wong@te.com

Singapore / Indonesia / Australia / Philippines
Tel : 63-2-988-9465
Mobile: 63-918-942-2360
Fax : 63-2-848-0205
Email: amanuel@te.com

India
Tel : 91-80-4011-5647
Mobile: 91-99-0248-8886
Email: badsha@te.com

te.com

© 2014 Tyco Electronics Corporation, a TE Connectivity Ltd. company. All Rights Reserved.

1-1773848-4 11/2014

PolySwitch, PolyZen, TE Connectivity, TE connectivity (Logo) and TE (logo) are trademarks.
Other logos, product and/or company names might be trademarks of their respective owners.

While TE has made every reasonable effort to ensure the accuracy of the information in this brochure, TE does not guarantee that it is error-free, nor does TE make any other representation, warranty or guarantee that the information is accurate, correct, reliable or current. TE reserves the right to make any adjustments to the information contained herein at any time without notice. TE expressly disclaims all implied warranties regarding the information contained herein, including, but not limited to, any implied warranties of merchantability or fitness for a particular purpose. The dimensions in this catalog are for reference purposes only and are subject to change without notice. Specifications are subject to change without notice. Consult TE for the latest dimensions and design specifications.