WHITE PAPER

The Benefits of Using a Decentralized Architecture Combined With PolySwitch PPTC Devices for Automotive Harness Protection

Compared to conventional fusing, this approach is yielding significant weight/cost benefits while enhancing flexibility and reliability

Guillemette Paour, TE Circuit Protection

Introduction

Today's automobile manufacturers are actively working toward vehicle weight reduction in an effort to help reduce CO_2 emission levels and increase fuel efficiency. Consequently, design engineers are seeking new technologies and design techniques that will help lower wire harness weight. To remain competitive in today's market, manufacturers must also reduce warranty repair costs and improve user satisfaction. As a result, automotive designers are confronted with the challenge of finding new ways to reduce vehicle weight without sacrificing system reliability.

These industry trends are leading designers to revisit their approach to protecting automobile power functions against damage from high-current fault conditions. Despite the clear weight advantages of using a decentralized harness technique and PPTC (Polymeric Positive Temperature Coefficient) devices for overcurrent protection, many continue to use traditional- and ultimately heavier - fusing techniques.

This paper presents the significant benefits of employing a decentralized architecture and TE Circuit Protection's PolySwitch devices to help protect automotive wiring harnesses, as compared to using a traditional centralized architecture with fuse protection. It also describes the unique device characteristics of PolySwitch devices, and provides specific application examples of how these devices, used in a decentralized architecture, can facilitate development of lighter, more flexible, and more reliable designs.

Trends in Harness Protection

Although a decentralized approach to harness protection that utilizes PPTC devices has been available since the 1990s, its adoption has been slow among OEMs. In fact, as electrical and electronic content has continued to add functionality, many wire systems in today's automobiles have become bigger, heavier and more complex than ever.

In addition to a resistance to changing traditional design methods, the benefits of using PPTC devices may have been hampered by the thicker wires historically used in vehicles. In the past, mechanical strength dictated that the smallest wire used in the vehicle was 0.35 mm^2 (22 AWG), which could carry current from 8-10A. This limitation cancelled some of the benefits of using PPTC devices for low-current signal circuits (e.g., <8A).

Today, emerging wire material technologies are enabling much smaller-diameter wires with more current-carrying capacity, including wires as small as 0.13 mm^2 (26 AWG) with a maximum 5A capability. This advancement has led to additional weight savings when used with a PPTC-protected distributed architecture.

One study, employing a decentralized architecture and TE Circuit Protection's PolySwitch devices, on a mid- to high-range passenger vehicle showed an estimated 50% savings in the weight of copper wires alone. Additionally, by using a decentralized architecture and replacing fuses with resettable PolySwitch devices, system reliability and design flexibility were significantly improved.

Automobile Harness Protection

In a car, current flows to the various electrical loads through several major and minor wire assemblies, which are distributed throughout the vehicle. Circuits typically carry 0.10A to 30A of current at system voltages of 14V for 12V battery systems (28V for 24V battery systems found in most trucks and buses). The wiring harnesses must be protected from damage caused by catastrophic thermal events, such as a short circuit.

© 2014 Tyco Electronics Corporation. All Rights Reserved. | TE Connectivity, TE connectivity (logo) and TE (logo) are trademarks. Other products, logos and company names mentioned herein may be trademarks of their respective owners.

The challenge for designers is to add circuit protection devices that help protect against potential overload conditions in the electrical system, while simultaneously reducing total cost and weight. Since a typical vehicle may contain hundreds of electrical circuits and more than a kilometer of wire, the complexity of the wiring system can make conventional circuit design techniques difficult to use and may lead to unnecessary overdesign.

Traditional Approach: Centralized Architecture and Fuses

The conventional solution to protect an automotive wiring system has been to use centralized and distributed multiple-load fusing, as shown in Figure 1a. In this type of centralized - or "star" - architecture, each function requires a separate wire. Where a single wire supports multiple functions both the wire and its fuse must also support the sum of the currents of those functions.

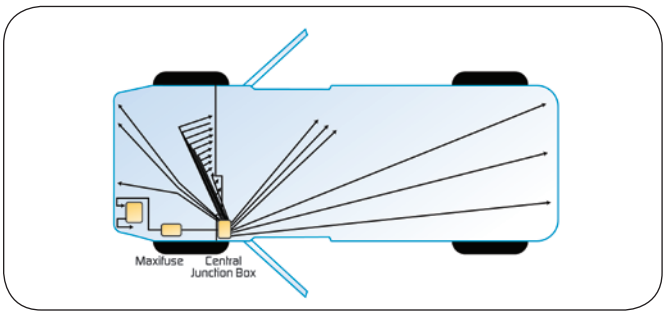

Figure 1a. Typical centralized architecture.

With so many circuits emanating from an electrical center, it has become almost impossible to route all the wires in and out of a single junction box and place the box in a driver-accessible location. As a result, system designers have resorted to harness design solutions that negate some of the desired end-benefits, such as:

1. sacrificing wire size optimization and fault isolation by combining loads in one circuit;
2. locating electrical centers where they are only accessible by trained service personnel, at increased cost; and
3. routing back and forth between various functional systems, increasing wiring length, size and cost. For example, due to the necessity for fuse accessibility, a conventional door module may have separate power feeds for windows, locks, LEDs and mirror functions, each potentially protected by a separate fuse in the junction box.

The traditional centralized approach to a vehicle's wiring architecture relies on a limited number of large fuses to protect multiple circuits against damage from high-current fault conditions. Although fuses are relatively inexpensive, as single-use devices they must be replaced when they blow. This characteristic means that fuses be mounted in accessible fuse boxes - a requirement that dictates system architecture and forces packaging and system layout compromises. Fuses also have nominal current ratings from 2A to 30A in the same form factor and are often substituted for ones that are larger than the design value or are jumped out of circuit when used in delocalized modules.

An Alternative Approach: Decentralized Architecture Using PolySwitch Devices

An optimized harness scheme has a hierarchal, tree-like structure with main power "trunks" dividing into smaller "branches," with overcurrent protection at each node. This architecture allows the use of smaller, space-saving wires that can reduce weight and cost. It also helps improve system protection and provides fault isolation, which ultimately enhances reliability. Figure 1b shows a decentralized architecture, where several junction boxes (illustrated in yellow) are supplied by power busses. The wires exiting the junction boxes to supply power to different functions can each be protected by a resettable circuit protection device.

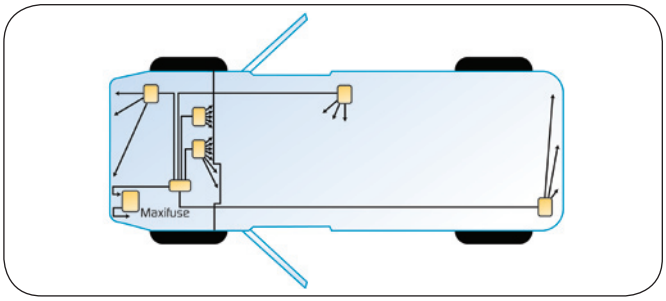

Figure 1b. Typical decentralized architecture.

© 2014 Tyco Electronics Corporation. All Rights Reserved. | TE Connectivity, TE connectivity (logo) and TE (logo) are trademarks. Other products, logos and company names mentioned herein may be trademarks of their respective owners.

Figure 2 shows a greatly simplified version of a partially distributed architecture, with each junction box either directly feeding a module or another nodal module that supplies peripheral loads.

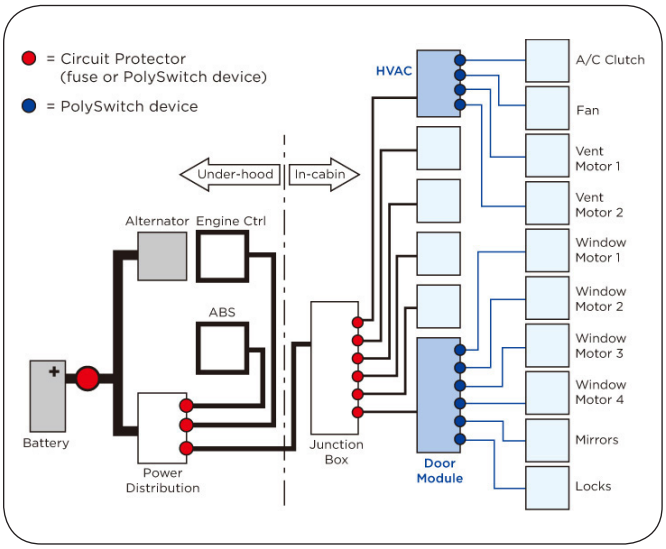

Figure 2. Details of a partially distributed automotive harness architecture.

Using PolySwitch overcurrent protection devices enables a decentralized approach to the electrical system architecture. Given the availability of automotive-grade devices and the reliability that can now be expected from relays, modules can switch and protect their own output loads and can be located in inaccessible areas.

Because the use of PolySwitch devices obviates the need to route electrical power through user-accessible central fuse blocks, power can be routed via the most direct path between the power source and load. This translates to shorter lengths of lighter gauge wire and results in significant size, weight, and cost savings, as well as a reduction in the number of terminals, contacts, switches, and electronic drive circuits used in each vehicle. Furthermore, a decentralized architecture can reduce the required number and size of connectors and junction boxes. By incorporating PolySwitch devices in the door module itself, for example, a single power feed can be used, saving wire and reducing the cost and size of the junction box.

Table 1 illustrates the weight savings that can be achieved by using a decentralized architecture and PolySwitch devices, as compared to conventional fusing techniques. (Note that the minimum wire size used in this example is 0.35mm^2, although some applications may be able to use smaller gauge, as noted earlier.)

Using resettable circuit protection devices that do not need to be driver accessible offers designers a number of solutions that may be used separately or in combination. A single junction box located in the instrument panel may still be employed. Unlike fuses, which must be positioned on the top of the junction box in order to be accessible, PPTC devices may be embedded inside the box or located on another face, which can reduce frontal area requirements as shown on Figure 3.

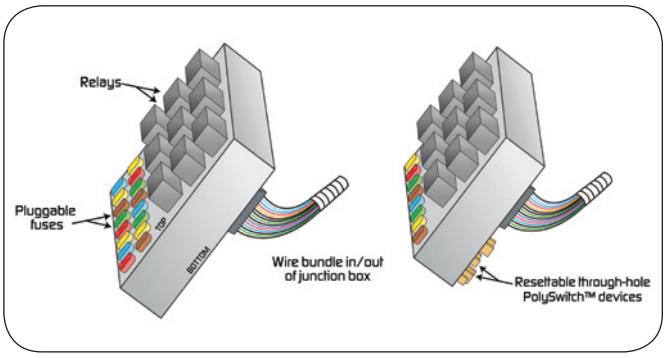

Figure 3. Comparison of a conventional junction box design (left) and a reduced size junction box design (right)

Moreover, by placing protection devices closer to the connectors, the trace length can be reduced and the overall junction box can be downsized. Alternatively, the junction boxes can be divided into smaller units and relocated around the vehicle without consideration for user accessibility. In these cases, the PolySwitch devices help designers achieve an electrical architecture that more closely reflects the optimized tree structure and its attendant benefits.

© 2014 Tyco Electronics Corporation. All Rights Reserved. | TE Connectivity, TE connectivity (logo) and TE (logo) are trademarks. Other products, logos and company names mentioned herein may be trademarks of their respective owners.

PolySwitch devices are available in a wide array of form factors, facilitating a variety of interface options with the junction box or electronic module. Through-hole and surface-mount devices lend themselves to installation in fuse boxes or modules using printed circuit boards. Strap devices can also be used in metal fret boxes.

A new generation of PolySwitch bladed devices can also be inserted like a bladed fuse or bi-metal breaker in the junction box. Even though these devices are resettable and do not need to be user accessible, the bladed form factor allows designers to replace a fuse or a bi-metal device without waiting for the next redesign of the junction box.

Application	Conventional Centralized Fusing			Decentralized Circuit Protection with PolySwitch PPTC Devices			Wire weight △	
	length (mm)	section (mm^2)	weight (kg)	length (mm)	section (mm^2)	weight (kg)	(kg)	(%)
Dual Power Window	13950	3	0.3750	3850	3	0.1035		
				10100	0.8	0.0724		
			0.3750			**0.1759**	**-0.199**	**-53%**
Exterior Lighting, Park/Tail Lamps	17050	0.8	0.1222	5650	0.8	0.0405		
				11400	0.35	0.0358		
			0.1222			**0.0762**	**-0.046**	**-38%**
LED CHMSL	2500	1.5	0.0336	2500	0.35	0.0078	**-0.026**	**-77%**
Air Bag	5000	3	0.1344	500	3	0.0134		
	3800	0.35	0.0119	400	0.35	0.0013		
			0.1463			**0.0147**	**-0.132**	**-90%**

Table 1. Wire weight comparison using conventional fusing vs. a decentralized harness architecture. Wire weight calculations based on copper density of 8.96×10^{-6} kg/mm^3.

Enhanced Reliability

In addition to weight and cost savings, the reliability of the circuit protection device is a key factor in determining how to protect the vehicle's electrical system. PPTC devices offer a clear advantage over fuses in that they are able to withstand multiple overcurrent events in automotive environments — including conditions such as abraded wire insulation and loose terminals in a connector — without the device blowing or degrading.

PolySwitch devices are made of conductive filler, such as carbon black, that provides conductive chains throughout the device.

The device exhibits low-resistance characteristics under normal operating conditions, but when excessive current flows through it, its temperature increases and the crystalline polymer changes to an amorphous state.

As illustrated in Figure 4, this transition causes the polymer to expand, breaking the conductive paths inside the conductive polymer. During a fault event, the device resistance typically increases by three or more orders of magnitude. This increased resistance helps protect the equipment in the circuit by reducing the amount of current that can flow under the fault condition to a low, steady-state level. The device remains in its latched (high-resistance) position until the fault is cleared and power to the circuit is cycled; at which time the conductive composite cools and re-crystallizes, restoring the PolySwitch device to a low-resistance state in the circuit and the affected equipment to normal operating conditions.

© 2014 Tyco Electronics Corporation. All Rights Reserved. | TE Connectivity, TE connectivity (logo) and TE (logo) are trademarks. Other products, logos and company names mentioned herein may be trademarks of their respective owners.

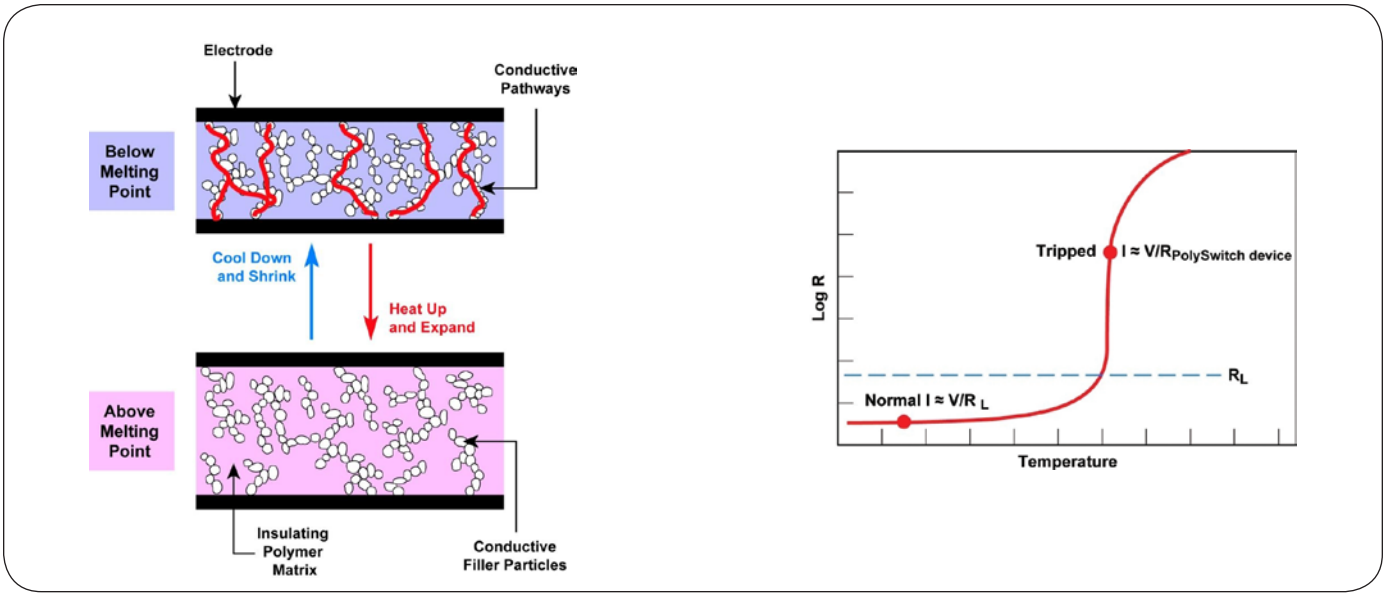

Figure 4. PolySwitch devices help protect the circuit by going from a low-resistance state to a high-resistance state in response to an overcurrent or overtemperature condition.

Technology Comparison

Because fuses are single-use devices and have a low thermal mass, in some applications they must be "oversized" or specified with an elevated current rating to prevent "nuisance blow". In contrast, the thermal mass and trip temperature of the PPTC device permit a closer match to the damage current of the equipment, thus reducing activation time in lower current fault events. In some configurations PPTC devices activate faster, at a given fault current, than fuses.

Nuisance blow is often caused by inrush currents associated with certain electrical components found on motorized equipment. For example, intermittent operation motors are usually designed to operate for a limited time. In general, operating these products for longer than the designed maximum limit usually results in stalling, overheating and, ultimately, failure. Fault conditions arise when the power is held on, either because of contact failure or customer misuse. To prevent overheating, the circuit protection device used must "trip" quickly — but not sooner than intended — to avoid creating a nuisance condition for the user.

The major advantage of using a PPTC device is that it can be specified with a trip current substantially below the normal operating current of the motor, but with a time-to-trip that is several times longer than a full system operating cycle, thereby preventing nuisance tripping.

A fuse can reach undesirable temperatures when exposed to a fault condition that exceeds the operating current of the system, but is not high enough to cause timely activation. In contrast, a PPTC device activates relatively quickly and stabilizes in temperature, so the fault current has little effect on its surface temperature.

Mean Time to Failure (MTTF) is another important consideration in choosing a circuit protection device. MTTF is calculated the same as MTBF (Mean Time Between Failure). The difference is that MTBF refers to repairable systems, and the time between one repair and the next failure. MTTF is the term used when no repair is possible, such as on a single component.

© 2014 Tyco Electronics Corporation. All Rights Reserved. | TE Connectivity, TE connectivity (logo) and TE (logo) are trademarks. Other products, logos and company names mentioned herein may be trademarks of their respective owners.

Table 2 compares the MTTF of the PolySwitch device with other circuit protection devices, according to Bellcore TR332, a telecom industry standard for reliability prediction.

Circuit Protection Device	MTTF
PolySwitch Device	29×10^{13} hours
Fuse < 30A	200×10^{6} hours
Fuse > 30A	100×10^{6} hours
Circuit Breaker cycling	588×10^{3} hours
Circuit Breaker non-cycling	5.9×10^{6} hours
Transistor > 6W	100×10^{6} hours

Table 2. MTTF comparison of circuit protection devices used in telecom applications.

Industry standards also play an important role in the design of a vehicle's electrical/electronic system. AEC-Q200, a stress test qualification for passive components, includes test requirements for PPTC devices used in the automotive environment. The test plan includes a series of electrical and environmental stress tests that require electrical verification prior to and after each stress. The electrical verification tests are designed to check that parts meet performance specifications for resistance, time-to-trip (TtT), and hold current at three different temperatures (-40°C, 25°C and max T).

TE Circuit Protection's PolySwitch devices exhibit the robust characteristics required for the automotive environment and are subjected to strict test procedures that define performance limits prior to and after the qualification stress tests. The TE Circuit Protection PS400 specification used for qualification of automotive-rated devices encompasses the AEC-Q200 standard and incorporates relevant physical, functional, environmental, electrical, and mechanical requirements specified in a variety of ANSI, ISO, JEDEC, UL and military standards.

Applying PolySwitch Devices and Decentralized Architecture

The decentralization of power distribution offers many opportunities for innovation in electrical and electronic system architecture. Following are several examples of how resettable circuit protection can play a role in the conversion.

Downsizing Wires, Terminals, Connectors and Switches for DC Motors and Actuators

Due to the potential for high stall currents, motor circuits in a typical centralized configuration are usually protected by a large circuit breaker or fuse. In this design, heavy gauge wire and, therefore, larger interface pins and connectors are required. The result is that a larger interface packaging area is necessary, resulting in space and weight concerns. Furthermore, since motors for rear-door windows and locks and rear-deck power antennas are not located near their control switches, the motors' power feeds can be long and heavy.

In comparison, a decentralized architecture allows the designer to strategically locate PPTC devices by mounting them on the switches, relays or electronic drive circuits that control the motors. PPTC devices also limit the flow through the power feed circuit to the protected motor. This allows the power feed wire to be downsized significantly. A power window circuit, for instance, is typically fed power by a 3.0 mm^2 wire protected by an upstream circuit breaker. By incorporating PPTC devices in the motor control switches, the power-feed wire can be downsized to 0.8 mm^2, as voltage drop dictates.

Downsizing wire, in turn, permits the use of smaller terminals, interface connectors, and switches. Additionally, micro-controlled circuits can use less costly, lower power, non-protected transistors in the drive circuits. This results in significant cost savings of the wire assembly and its associated hardware. Using small-gauge wire decreases the size of the wiring assembly bundle and increases the wire's flexibility. This improves the wiring assembly's dress. It also reduces the force needed to install the wire in the vehicle thus decreasing the potential for damage during installation. The relevance of this benefit is illustrated in the following example.

Reducing Power Feed Wire Length in Air Bag Safety Circuits

Vehicle air bags are a perfect example of the stringent requirements placed on the wiring assembly of safety circuits. These include twisted signal wires, special circuit connections, shorting bars at connector interfaces, and redundant power feeds.

© 2014 Tyco Electronics Corporation. All Rights Reserved. | TE Connectivity, TE connectivity (logo) and TE (logo) are trademarks. Other products, logos and company names mentioned herein may be trademarks of their respective owners.

In a typical centralized approach to harness protection, the power feed in an air bag installation is routed from the ignition switch to a fuse block and then to the air bag control module in the center of the instrument panel. Alternatively, a decentralized approach allows for strategically locating the PPTC devices at the base of the steering column. This enables the power feed to be routed directly from the ignition switch to the air bag control module. This approach may result in the elimination of more than a meter of power feed wire.

Reducing Wire Weight for Trailer Tow Light Circuits

Rough usage and inconsistent maintenance, as well as short circuits and overloads resulting from water ingress can make the trailer tow circuit a high-risk application. To improve reliability, trailer tow circuits typically duplicate vehicle wiring with a separate fuse and power feed circuit. In this design, all of the lights are usually protected by a single fuse located in a centrally located fuse block.

In a decentralized architecture, however, PolySwitch devices can be located in a lamp assembly, connector or splice block, effectively eliminating three fuses, a relay, three long lengths of wire and the associated connectors. This approach can also simplify the design of brake, turn and hazard module and switches. Figures 5a and 5b compare a conventional centralized design to a decentralized protection technique in which individual PolySwitch devices are used at each corresponding junction node to help protect each light circuit.

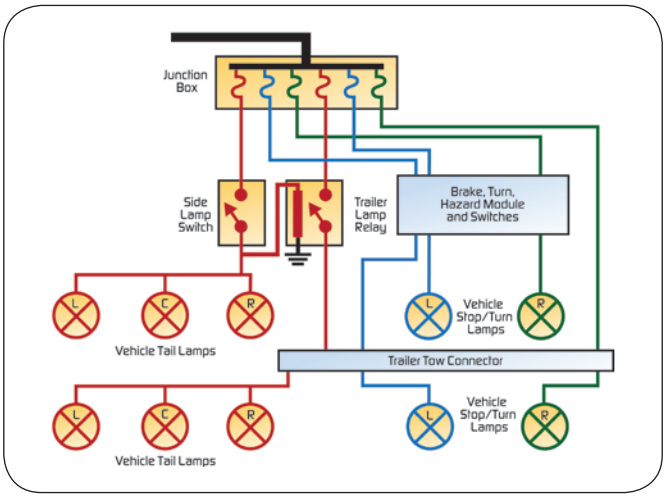

Figure 5a. Conventional centralized protection scheme approach.

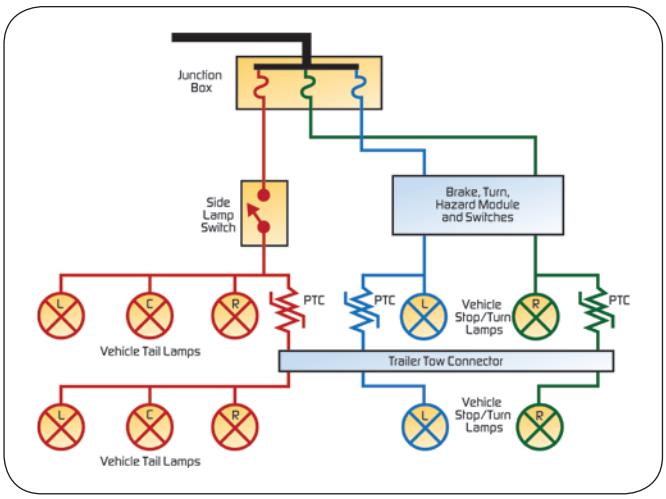

Figure 5b. Decentralized protection scheme approach using PolySwitch PPTC devices.

By using a decentralized architecture, the vehicle's wiring is protected by the PolySwitch device in the event of a short circuit or an overload. After the trailer is disconnected from the power source, the PolySwitch device will automatically reset. Unlike conventional circuit protection approaches, this design also eliminates the need for the operator to locate or replace a blown fuse in the event of a transient overload condition.

In addition, the wire used to connect each light to the junction node only has to carry the current drawn by the light it powers – even though the common feed wire and its fuse must carry the total current drawn by all the lights. Most importantly, if any trailer tow light circuit experiences an overcurrent fault, that circuit alone is affected and the other lights will continue to function normally.

Reducing Wire Size for LED Center High Mount Stop Lamp Circuits

The lower power consumption and design flexibility provided by light emitting diodes, or LEDs, make them increasingly popular in any lighting circuit, including Center-High-Mount Stop Lamps (CHMSL). Using LEDs in place of incandescent lamps in this application offers the benefit of enabling small-gauge, low-current wiring that can be routed easily into the vehicle's roof lining and inflexible connections close to hinges as shown in Figure 6.

© 2014 Tyco Electronics Corporation. All Rights Reserved. | TE Connectivity, TE connectivity (logo) and TE (logo) are trademarks. Other products, logos and company names mentioned herein may be trademarks of their respective owners.

Employing PolySwitch devices and a decentralized architecture to protect LED CHMSL lighting applications offers increased design flexibility, reduces the number and weight of wires and enhances reliability, as compared to using a centralized approach and fuses.

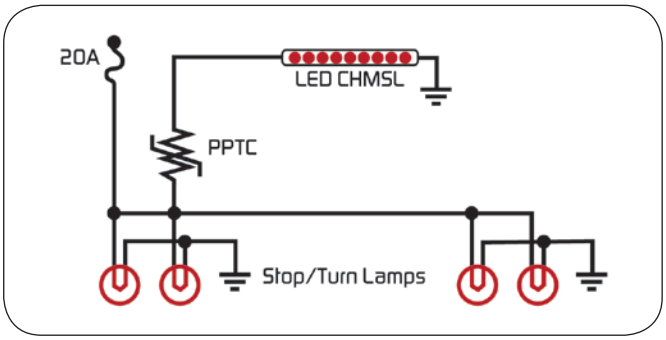

Figure 6. Distributed harness protection in LED CHMSL application.

Conclusion

Employing a decentralized architecture combined with PPTC overcurrent protection can significantly reduce weight in automotive designs. Although a decentralized approach has been understood for many years, the recent availability of thinner wires that can carry higher current, as well as new industry incentives, makes this approach clearly superior to conventional fusing techniques. Using TE Circuit Protection's PolySwitch PPTC devices in a decentralized harness protection scheme offers many important design benefits. Due to their resettable functionality, low-resistance characteristics, and a wide array of current ratings, PolySwitch devices can help automotive designers reduce wire length and weight while facilitating design flexibility and system reliability.

te.com

© 2014 Tyco Electronics Corporation, a TE Connectivity Ltd. company. All Rights Reserved.
RCP0057E 07/2014
PolySwitch, TE Connectivity, TE connectivity (Logo) and TE (logo) are trademarks. Other logos, product and/or company names might be trademarks of their respective owners.

While TE has made every reasonable effort to ensure the accuracy of the information in this brochure, TE does not guarantee that it is error-free, nor does TE make any other representation, warranty or guarantee that the information is accurate, correct, reliable or current. TE reserves the right to make any adjustments to the information contained herein at any time without notice. TE expressly disclaims all implied warranties regarding the information contained herein, including, but not limited to, any implied warranties of merchantability or fitness for a particular purpose. The dimensions in this catalog are for reference purposes only and are subject to change without notice. Specifications are subject to change without notice. Consult TE for the latest dimensions and design specifications.

© 2014 Tyco Electronics Corporation. All Rights Reserved. | TE Connectivity, TE connectivity (logo) and TE (logo) are trademarks. Other products, logos and company names mentioned herein may be trademarks of their respective owners.