ATPL Series Power Line Communications Device

ATPL250A

PRELIMINARY DATASHEET

Description

ATPL250A is a G3-PLC modem for Power Line Communication. ATPL250A flexible architecture, composed of hardware accelerators and coprocessors, achieves a very efficient G3 PHY layer implementation.

ATPL250A is therefore a compact and high-efficient device for a wide range of Smart Grid applications such as Smart Metering (Smart Meters and Data Concentrators), Lighting, Industrial/Home Automation, Home and Building Energy Management Systems, Solar Energy and Plug-in Hybrid Electric Vehicle (PHEV) Charging Stations.

ATPL250A has been conceived to be bundled with an external Atmel® MCU. Atmel provides a G3 PHY layer library which is used by the external MCU to take control of ATPL250A PHY layer device.

ATMEL provides high-efficient, reduced BOM reference designs for different coupling options, targeting common configurations in standard frequency bands complying with existing regulations (CENELEC, FCC, ARIB), see “PLC coupling circuitry description” .

1. Features

- G3-PLC modem
  - Implements G3 CENELEC-A, FCC and ARIB profiles (ITU-T G.9903, June ´14)
  - Power Line Carrier Modem for 50 Hz and 60 Hz mains
  - G3-PLC coherent and differential modulation schemes available
- Automatic Gain Control and continuous amplitude tracking in signal reception
- 1 SPI peripheral (slave) to external MCU
- Zero cross detection
- Embedded PLC Analog Front End (AFE), requires only external discrete high efficient Class D Line Driver for signal injection
- TA range -40ºC to +85ºC
- Package
  - 80-lead LQFP

1.1 ATPL250A Application Block Diagram

ATPL250A has been conceived to be easily managed by an external microcontroller through a 5-line interface. This interface is comprised of a 4-line standard Serial Peripheral Interface (SPI) and an additional line used as interrupt from the ATPL250A to the external microcontroller. The external microcontroller can fully manage and control the ATPL250A (Phy layer, MAC coprocessing, etc.) by accessing the internal peripheral registers.

Figure 1-1. ATPL250A application example

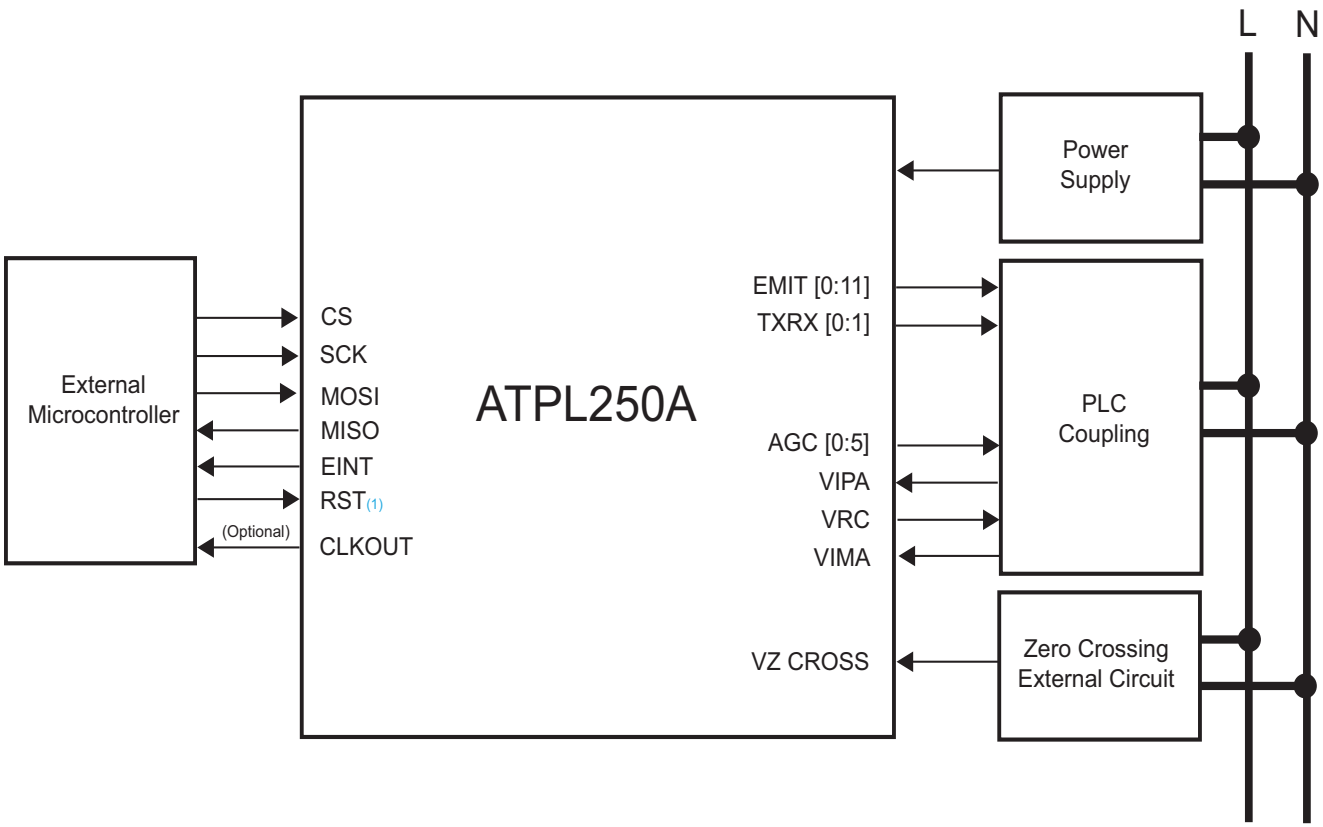

Note: 1. There are several RST signals (ARST, SRST and PLL INIT), for more details see Section 3. ”Signal Description”.

2. Block Diagram

Figure 2-1. ATPL250A Functional Block Diagram

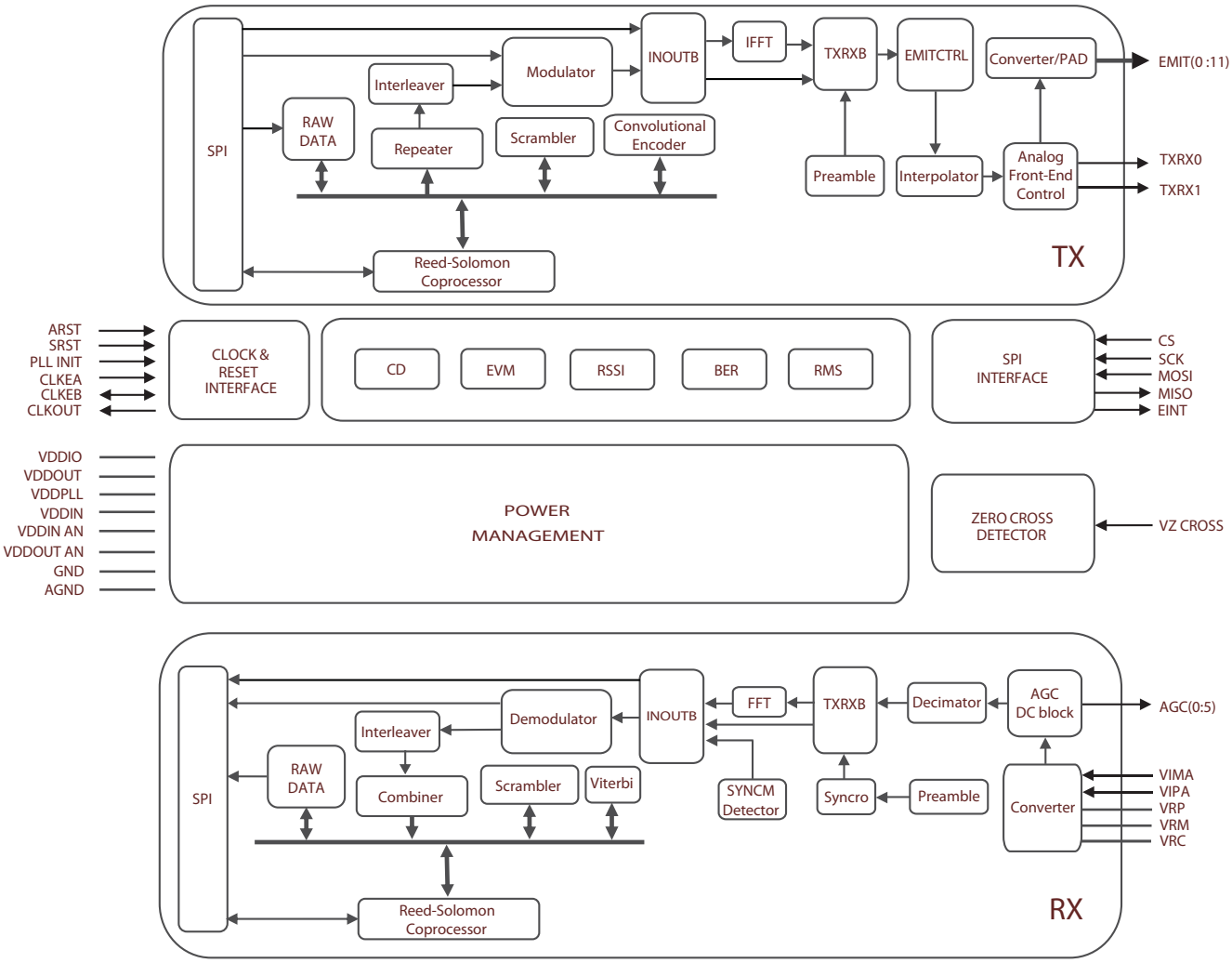

3. Signal Description

Table 3-1. Signal Description List

Signal Name	Function	Type	Active Level	Voltage reference	Comments
Power Supplies					
VDDIO	3.3V digital supply. Digital power supply must be decoupled by external capacitors	Power			3.0V to 3.6V
VDDIN	3.3V Digital LDO input supply	Power			3.0V to 3.6V
VDDIN AN	3.3V Analog LDO input supply	Power			3.0V to 3.6V
VDDOUT AN	1.2V Analog LDO output. A capacitor in the range 0.1 µF - 10 µF must be connected to each pin	Power			1.2V
VDDOUT	1.2V Digital LDO output. A capacitor in the range 0.1 µF - 10 µF must be connected to each pin	Power			1.2V
VDDPLL	1.2V PLL supply. It must be decoupled by a 100nF external capacitor, and connected to VDDOUT through a filter (Cut off frequency: 25 kHz)	Power			1.2V
GND[1]	Digital Ground	Power			
AGND[1]	Analog Ground	Power			
Clocks, Oscillators and PLLs					
CLKEA[2]	External Clock Oscillator • CLKEA must be connected to one terminal of a crystal (when a crystal is being used) or used as input for external clock signal	Input		VDDIO	
CLKEB[2]	External Clock Oscillator • CLKEB must be connected to one terminal of a crystal (when a crystal is being used) or must be floating when an external clock signal is connected through CLKEA	I/O		VDDIO	
CLKOUT	12 MHz CLK Output	Output		VDDIO	
Reset/Test					
ARST	Asynchronous Reset	Input	Low	VDDIO	Internal pull up[3]
SRST	Synchronous Reset	Input	Low	VDDIO	Internal pull up[3]
PLL INIT	PLL Initialization Signal	Input	Low	VDDIO	Internal pull up[3]
GPLC (G3 Power Line Communications) Transceiver					
EMIT [0:11][4]	PLC Tri-state Transmission ports	Output		VDDIO	
AGC [0:5]	Automatic Gain Control: • These digital tri-state outputs are managed by AGC hardware logic to drive external circuitry when input signal attenuation is needed	Output		VDDIO	
TXRX0	Analog Front-End Transmission/Reception for TXDRV0 • This digital output is used to modify external coupling behavior in Transmission/Reception. The suitable value depends on the external circuitry configuration. The polarity of this pin can be inverted by software.	Output		VDDIO	

Table 3-1. Signal Description List

Signal Name	Function	Type	Active Level	Voltage reference	Comments
TXRX1	Analog Front-End Transmission/Reception for TXDRV1 • This digital output is used to modify external coupling behavior in Transmission/Reception. The suitable value depends on the external circuitry configuration. The polarity of this pin can be inverted by software.	Output		VDDIO	
VZ CROSS[5]	Mains Zero-Cross Detection Signal: • This input detects the zero-crossing of the mains voltage	Input		VDDIO	Internal pull down[3]
VIMA	Negative Differential Voltage Input	Input		VDDOUT AN	
VIPA	Positive Differential Voltage Input	Input		VDDOUT AN	
VRP	Internal Reference “Plus” Voltage. Connect an external decoupling capacitor between VRP and VRM (1nF - 100nF)	Output		VDDOUT AN	
VRM	Internal Reference “Minus” Voltage. Connect an external decoupling capacitor between VRP and VRM (1nF - 100nF)	Output		VDDOUT AN	
VRC	Common-mode Voltage. Bypass to analog ground with an external decoupling capacitor (100pF - 1nF)	Output		VDDOUT AN	
Serial Peripheral Interface - SPI					
CS	SPI CS • SPI bridge Slave Select.	Input	Low	VDDIO	Internal pull up[3]
SCK	SPI SCK • SPI bridge Clock signal	Input		VDDIO	Internal pull up[3]
MOSI	SPI MOSI • SPI bridge Master Out Slave In	Input		VDDIO	Internal pull up[3]
MISO	SPI MISO • SPI bridge Master In Slave Out	Output		VDDIO	
EINT	PHY Layer External Interrupt	Output	Low	VDDIO	

Notes:
1. Separate pins are provided for GND and AGND grounds. Layout considerations should be taken into account to reduce interference. Ground pins should be connected as shortly as possible to the system ground plane. For more details about EMC Considerations, please refer to AVR040 application note.
2. The crystal should be located as close as possible to CLKEA and CLKEB pins. See Table 6-7 on page 16.
3. See Table 6-5 on page 13.
4. Different configurations allowed depending on external topology and net behavior.
5. Depending on whether an isolated or a non-isolated power supply is being used, isolation of this pin should be taken into account in the circuitry design. Please refer to the Reference Design for further information.

4. Analog Front-End

4.1 PLC coupling circuitry description

Atmel PLC coupling reference designs have been designed to achieve high performance, low cost and simplicity.

With these values on mind, Atmel has developed a set of PLC couplings covering frequencies below 500 kHz compliant with different applicable regulations. See Table 3-1 below.

Atmel PLC technology is purely digital and does not require external DAC/ADC, thus simplifying the external required circuitry. Generally Atmel PLC coupling reference designs make use of few passive components plus a Class D amplification stage for transmission.

All PLC coupling reference designs are generally composed by the same sub-circuits:

- Transmission Stage
- Reception Stage
- Filtering Stage
- Coupling Stage

Figure 4-1. PLC coupling block diagram

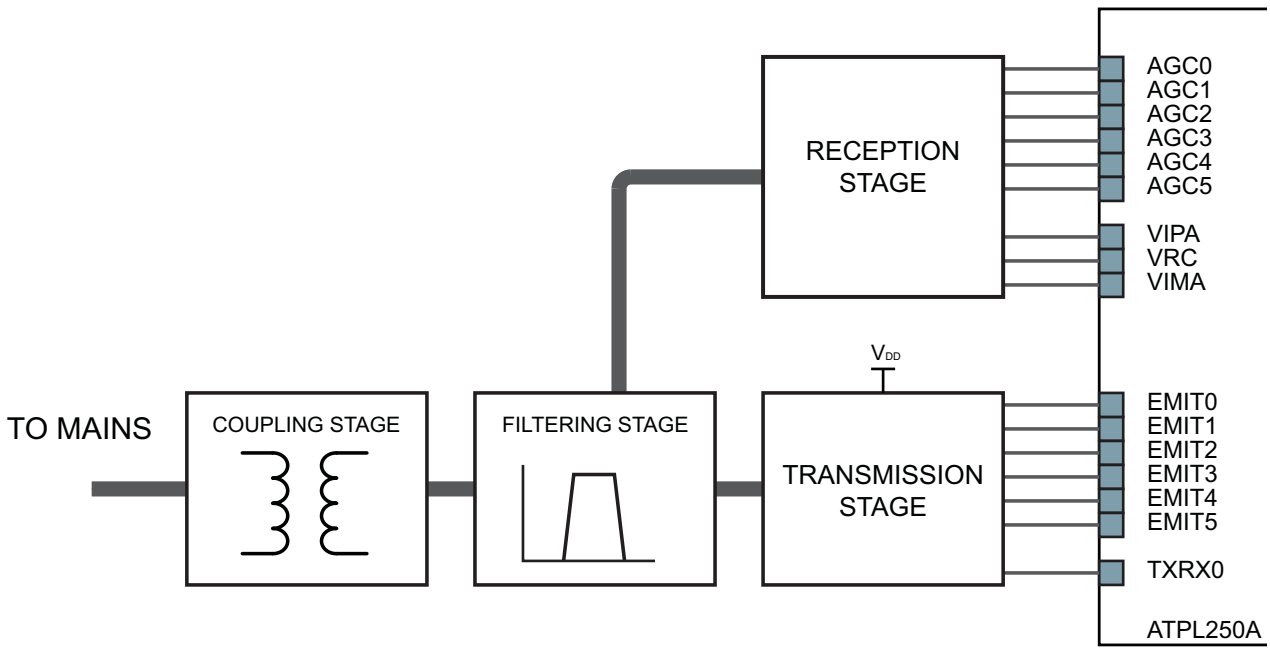

A particular reference design can contain more than one sub-circuit of the same kind (i.e.: two transmission stages).

4.1.1 Transmission Stage

The transmission stage adapts the EMIT signals and amplifies them if required. It can be composed by:

- Driver: A group of resistors which adapt the EMIT signals to either control the Class-D amplifier or to be filtered by the next stage.
- Amplifier: If required, a Class-D amplifier which generates a square waveform from 0 to V_{DD} is included.
- Bias and protection: A couple of resistors and a couple of Schottky barrier diodes provide a DC component and provide protection from received disturbances.

Transmission stage shall be always followed by a filtering stage.

4.1.2 Filtering Stage

The filtering stage is composed by band-pass filters which have been designed to achieve high performance in field deployments complying at the same time with the proper normative and standards.

The in-band flat response filtering stage does not distort the injected signal, reduces spurious emission to the limits set by the corresponding regulation and blocks potential interferences from other transmission channels.

The Filtering stage has three aims:

- Band-pass filtering of high frequency components of the square waveform generated by the Transmission Stage.
- Adapt Input/Output impedances for optimal reception/transmission. This is controlled by TXRX signal.
- In some cases, Band-pass filtering for received signals.

When the system is intended to be connected to a physical channel with high voltage or which is not electrically referenced to the same point then the filtering stage must be always followed by a coupling stage.

4.1.3 Coupling Stage

The coupling stage blocks the DC component of the line to/from which the signal is injected/received (i.e.: 50/60 Hz of the mains). This is carried out by a high voltage capacitor.

Coupling stage could also electrically isolate the coupling circuitry from the external world by means of a 1:1 transformer.

4.1.4 Reception Stage

The reception stage adapts the received analog signal to be properly captured by the ATPL250A internal reception chain. Reception circuit is independent of the PLC channel which is being used. It basically consists of:

- Anti aliasing filter (RC Filter)
- Automatic Gain Control (AGC) circuit
- Driver of the internal ADC

The AGC circuit avoids distortion on the received signal that may arise when the input signal is high enough to polarize the protective diodes in direct region.

The driver to the internal ADC comprises a couple of resistors and a couple of capacitors. This driver provides a DC component and adapts the received signal to be properly converted by the internal reception chain.

4.1.5 Generic PLC Coupling

Please consider that this is a generic PLC Coupling design for a particular application please refer to Atmel doc43052 “PLC Coupling Reference Designs”.

Figure 4-2. PLC Coupling block diagram detailed

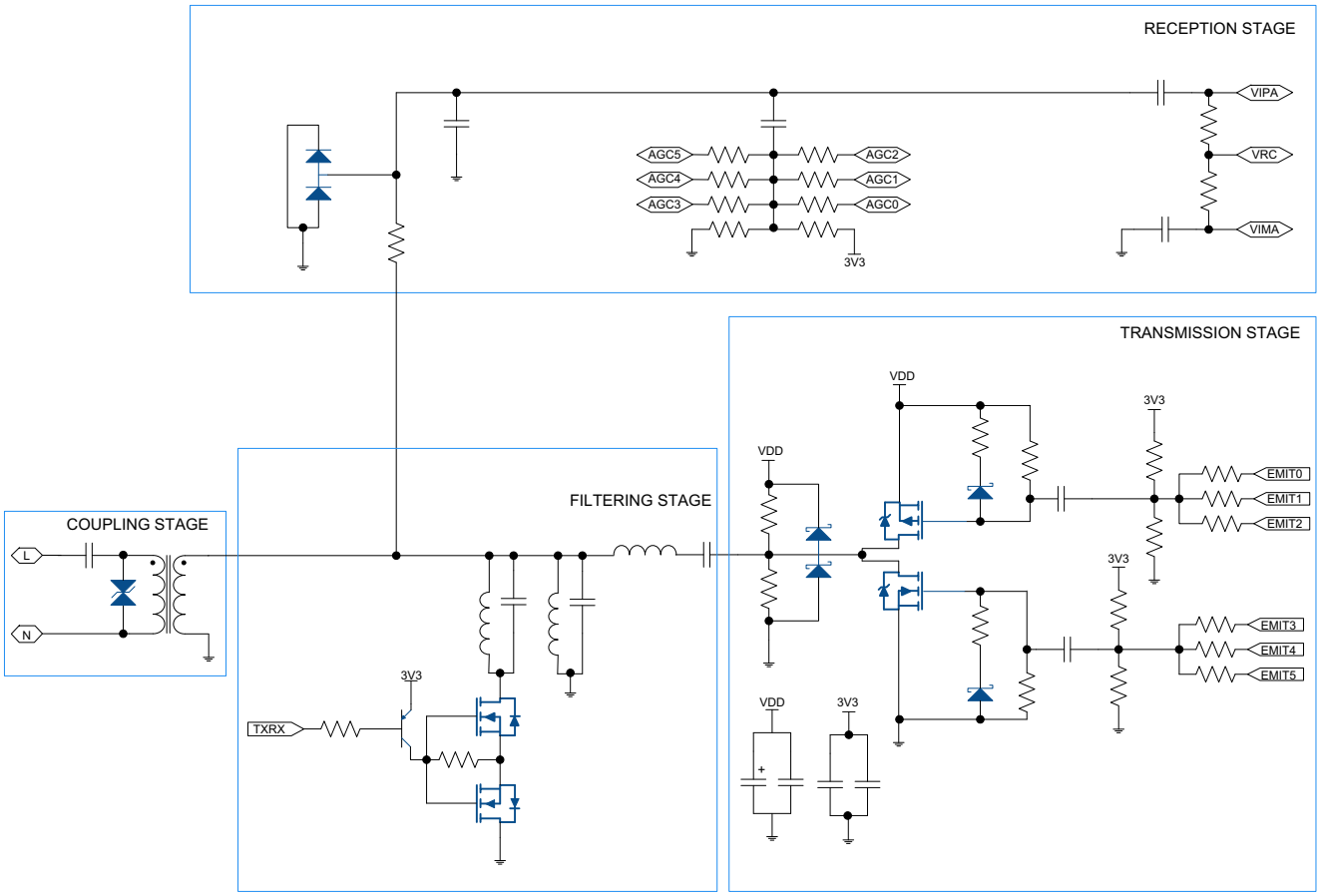

4.2 ATPLCOUP reference designs

Atmel provides PLC coupling reference designs for different applications and frequency bands up to 500 kHz. Please refer to Atmel doc43052 “PLC Coupling Reference Designs” for a detailed description.

4.3 Zero-crossing detection

Zero-crossing detector block is based on a PLL digital circuit which is able to track 50Hz or 60Hz ± 10% mains.

5. Package and Pinout

5.1 80-Lead LQFP Package Outline

The 80-lead LQFP package has a 0.5 mm pitch and respects Green standards.

Figure 5-1 shows the orientation of the 80-lead LQFP package. Refer to the section "Mechanical Characteristics" for the 80-lead LQFP package mechanical drawing.

Figure 5-1. Orientation of the 80-Lead LQFP Package

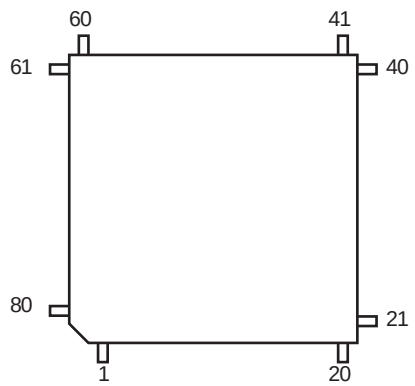

5.2 80-Lead LQFP Pinout

Table 5-1. 80 - Lead LQFP Pinout

1	NC	21	VDDIO	41	GND	61	GND
2	NC	22	NC	42	EMIT8	62	AGND
3	NC	23	CLKOUT	43	EMIT9	63	VDDOUT AN
4	ARST	24	CS	44	EMIT10	64	VIMA
5	PLL INIT	25	SCK	45	EMIT11	65	VIPA
6	GND	26	MOSI	46	VDDIO	66	VDDOUT AN
7	CLKEA	27	MISO	47	GND	67	AGND
8	GND	28	VDDIO	48	VDDOUT	68	VRP
9	CLKEB	29	GND	49	TXRX0	69	VRM
10	VDDIO	30	EMIT0	50	TXRX1	70	VRC
11	GND	31	EMIT1	51	GND	71	VDDIN AN
12	VDDPLL	32	EMIT2	52	AGC2	72	AGND
13	GND	33	EMIT3	53	AGC5	73	AGND
14	VDDIN	34	VDDIO	54	AGC1	74	VDDIN AN
15	VDDIN	35	GND	55	AGC4	75	GND
16	GND	36	EMIT4	56	AGC0	76	VDDIO
17	VDDOUT	37	EMIT5	57	AGC3	77	VZ CROSS
18	GND	38	EMIT6	58	VDDIO	78	NC
19	NC	39	EMIT7	59	GND	79	NC
20	SRST	40	VDDIO	60	EINT	80	NC

6. Electrical characteristics

6.1 Absolute Maximum Ratings

Permanent device damage may occur if Absolute Maximum Ratings are exceeded. Functional operation should be restricted to the conditions given in the Recommended Operating Conditions section. Exposure to the Absolute Maximum Conditions for extended periods may affect device reliability.

Table 6-1. Absolute Maximum Ratings

Parameter	Symbol	Rating	Unit
Supply Voltage	VDDIO	-0.5 to 4.0	V
Input Voltage	VI	-0.5 to VDDIO +0.5 (≤ 4.0V)	V
Output Voltage	VO	-0.5 to VDDIO +0.5 (<4.0V)	V
Storage Temperature	T_{ST}	-55 to 125	ºC
Junction Temperature	T_J	-40 to 125	ºC
Output Current[(1)]	IO	±10[(2)]	mA

Notes: 1. DC current that continuously flows for 10 ms or more, or average DC current.
2. Applies to all the pins except EMIT pins. EMIT pins should be only used according to circuit configurations recommended by Atmel.

ATTENTION observe EDS precautions

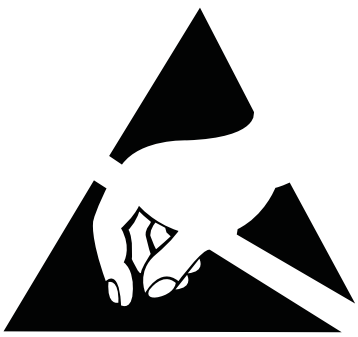

Precautions for handling electrostatic sensitive devices should be taken into account to avoid malfunction. Charged devices and circuit boards can discharge without detection.

6.2 Recommended Operating Conditions

Table 6-2. Recommended Operating Conditions

Parameter	Symbol	Rating			Unit
		Min	Typ	Max	
Supply Voltage	VDDIO	3.00	3.30	3.60	V
	VDDIN AN	3.00	3.30	3.60	
	VDDIN	3.00	3.30	3.60	
	VDDPLL	1.08	1.20	1.32	
Junction Temperature	T_J	-40	25	125	ºC
Ambient Temperature	T_A	-40	--	85	

Table 6-3. Thermal Data

Parameter	Symbol	Conditions		LQFP80	Unit
		PCB Layers	Air Speed		
Thermal resistance junction-to-ambient steady state	$R_{Theta\text{-}ja}$	2	0 m/s	64	ºC/W
			1 m/s	56	
			3 m/s	48	
		4	0 m/s	43	
			1 m/s	40	
			3 m/s	36	

Theta-ja is calculated based on a standard JEDEC defined environment and is not reliable indicator of a device's thermal performance in a non-JEDEC environment. The customer should always perform their own calculations/simulations to ensure that their system's thermal performance is sufficient.

6.3 Electrical Pinout

Table 6-4. 80 - Lead LQFP Electrical Pinout

Pin No	Pin Name	I/O	I(mA)	Res	HY	Pin No	Pin Name	I/O	I(mA)	Res	HY
1	NC	-	-	-	-	41	GND	P	-	-	-
2	NC	-	-	-	-	42	EMIT8	OT	± 16	-	-
3	NC	-	-	-	-	43	EMIT9	OT	± 16	-	-
4	ARST	I	-	PU	Y	44	EMIT10	OT	± 16	-	-
5	PLL INIT	I	-	PU	Y	45	EMIT11	OT	± 16	-	-
6	GND	P	-	-	-	46	VDDIO	P	-	-	-
7	CLKEA	I	-	-	-	47	GND	P	-	-	-
8	GND	P	-	-	-	48	VDDOUT	P	-	-	-
9	CLKEB	I/O	-	-	-	49	TXRX0	O	± 8	-	-
10	VDDIO	P	-	-	-	50	TXRX1	O	± 8	-	-
11	GND	P	-	-	-	51	GND	P	-	-	-
12	VDDPLL	P	-	-	-	52	AGC2	OT	± 16	-	Y
13	GND	P	-	-	-	53	AGC5	OT	± 16	-	Y
14	VDDIN	P	-	-	-	54	AGC1	OT	± 6	-	Y
15	VDDIN	P	-	-	-	55	AGC4	OT	± 6	-	Y
16	GND	P	-	-	-	56	AGC0	OT	± 4	-	Y
17	VDDOUT	P	-	-	-	57	AGC3	OT	± 4	-	Y
18	GND	P	-	-	-	58	VDDIO	P	-	-	-
19	NC	-	-	-	-	59	GND	P	-	-	-
20	SRST	I	-	PU	Y	60	EINT	O	± 4	-	-
21	VDDIO	P	-	-	-	61	GND	P	-	-	-
22	NC	-	-	-	-	62	AGND	P	-	-	-
23	CLKOUT	O	± 8	-	-	63	VDDOUT AN	P	-	-	-
24	CS	I	-	PU	Y	64	VIMA	I	-	-	-
25	SCK	I	-	PU	Y	65	VIPA	I	-	-	-
26	MOSI	I	-	PU	Y	66	VDDOUT AN	P	-	-	-
27	MISO	O	± 6	-	-	67	AGND	P	-	-	-
28	VDDIO	P	-	-	-	68	VRP	O	-	-	-
29	GND	P	-	-	-	69	VRM	O	-	-	-
30	EMIT0	OT	± 16	-	-	70	VRC	O	-	-	-
31	EMIT1	OT	± 16	-	-	71	VDDIN AN	P	-	-	-
32	EMIT2	OT	± 16	-	-	72	AGND	P	-	-	-
33	EMIT3	OT	± 16	-	-	73	AGND	P	-	-	-
34	VDDIO	P	-	-	-	74	VDDIN AN	P	-	-	-
35	GND	P	-	-	-	75	GND	P	-	-	-
36	EMIT4	OT	± 16	-	-	76	VDDIO	P	-	-	-
37	EMIT5	OT	± 16	-	-	77	VZ CROSS	I	-	PD	Y
38	EMIT6	OT	± 16	-	-	78	NC	-	-	-	-
39	EMIT7	OT	± 16	-	-	79	NC	-	-	-	-
40	VDDIO	P	-	-	-	80	NC	-	-	-	-

I/O = pin direction: I = input, O = output, T = tri-state, P = power

I(mA) = nominal current: + = source, - = sink, X = fixed by external resistor. See "V-I curves "

Res = pin pull up/pull down resistor: PU = pull up, PD = pull down (15 - 70 kΩ, typical 33 kΩ)

HY = Input Hysteresis: Y = yes

6.4 DC Characteristics

Table 6-5. ATPL250A DC Characteristics

Parameter	Condition	Symbol	Rating			Unit
			Min	Typ	Max	
Supply Voltage		VDDIO	3.00	3.30	3.60	V
H-level Input Voltage (3.3V CMOS)		VIH	2.0	-	VDDIO +0.3	
L-level Input Voltage (3.3V CMOS)		VIL	-0.3	-	0.8	
H-level Output Voltage	3.3V I/O IOH = -100 µA	VOH	VDDIO -0.2	-	VDDIO	
L-level Output Voltage	3.3V I/O IOL = 100 µA	VOL	0	-	0.2	
H-level Output V - I Characteristics	3.3V I/O VDDIO=3.3±0.3	IOH	See "V-I curves " section			mA
L-level Output V - I Characteristics	3.3V I/O VDDIO=3.3±0.3	IOL	See "V-I curves " section			
Internal Pull-up Resistor(1)	3.3V I/O	Rpu	15	33	70	kΩ
Internal Pull-down Resistor(1)	3.3V I/O	Rpd	15	33	70	

Note: 1. Only applicable to pins with internal pulling.

6.4.1 V-I curves

V-I Characteristics 3.3V standard CMOS IO L, M type

Apply to pins EINT, AGC0, AGC3

Condition:	MIN	Process = Slow	T_J = 125°C	VDDIO = 3.0V
	TYP	Process = Typical	T_J = 25°C	VDDIO = 3.3V
	MAX	Process = Fast	T_J = -40°C	VDDIO = 3.6V

Figure 6-1. V-I curves for pins EINT, AGC0, AGC3

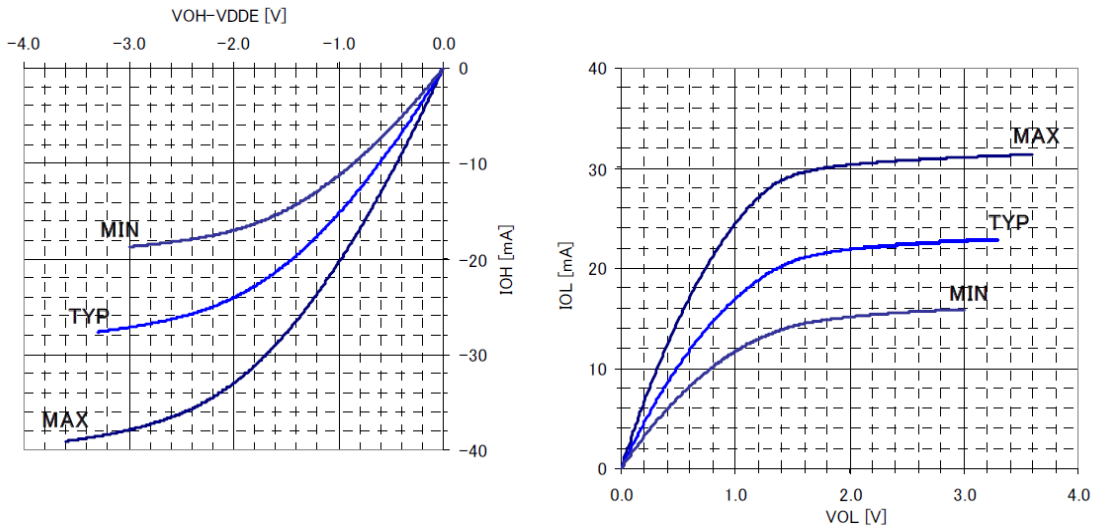

Apply to pins MISO, AGC1, AGC4

Condition:	MIN	Process = Slow	T_J = 125°C	VDDIO = 3.0V
	TYP	Process = Typical	T_J = 25°C	VDDIO = 3.3V
	MAX	Process = Fast	T_J = -40°C	VDDIO = 3.6V

Figure 6-2. V-I curves for pins MISO, AGC1, AGC4

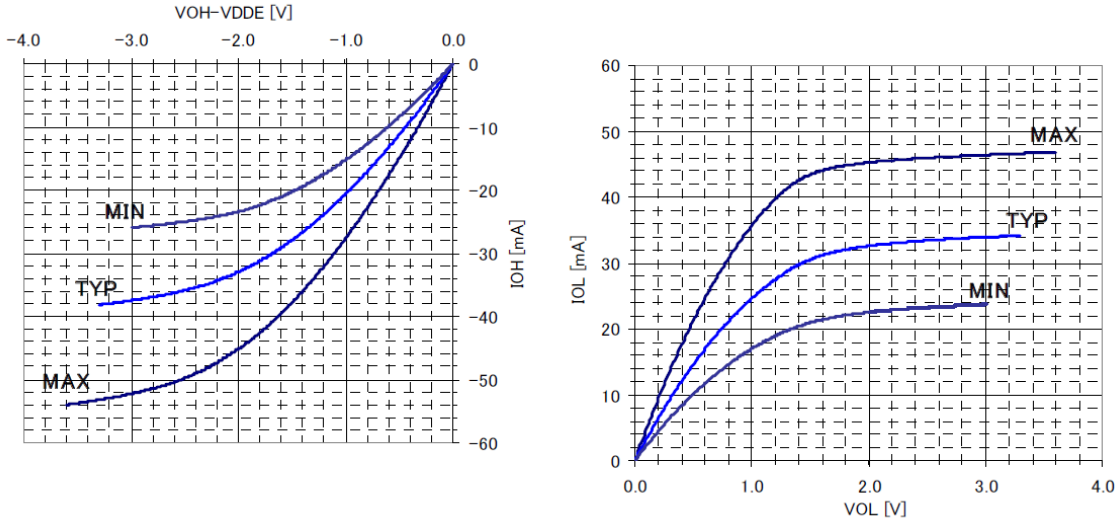

Apply to pins CLKOUT, TXRX0, TXRX1

Condition:	MIN	Process = Slow	T_J = 125°C	VDDIO = 3.0V
	TYP	Process = Typical	T_J = 25°C	VDDIO = 3.3V
	MAX	Process = Fast	T_J = -40°C	VDDIO = 3.6V

Figure 6-3. V-I curves for pins CLKOUT, TXRX0, TXRX1

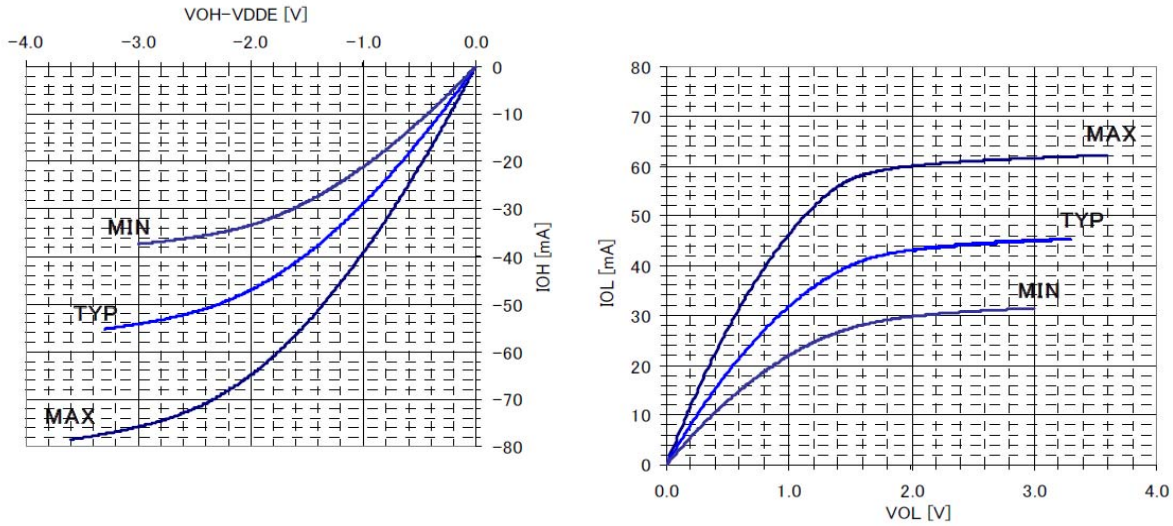

Apply to pins EMIT [0:11], AGC2, AGC5

Condition:	MIN	Process = Slow	T_J = 125°C	VDDIO = 3.0V
	TYP	Process = Typical	T_J = 25°C	VDDIO = 3.3V
	MAX	Process = Fast	T_J = -40°C	VDDIO = 3.6V

Figure 6-4. V-I curves for pins EMIT [0:11], AGC2, AGC5

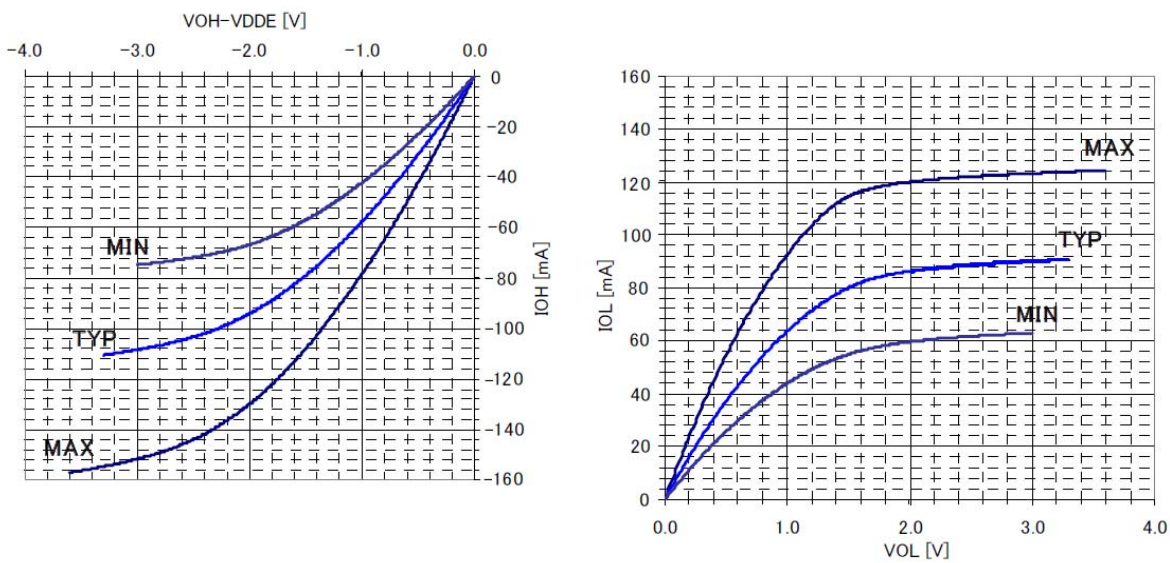

6.5 Power Consumption

Table 6-6. Power Consumption

Parameter	Condition	Symbol	Rating			Unit
			Min	Typ	Max	
Power Consumption	T_J = 25ºC VDDIO = 3.3V VDDIN = 3.3V VDDIN AN = 3.3V	P_{25}	- -	245	- -	mW
Power Consumption (worst case)	T_J = 125ºC VDDIO = 3.6V VDDIN = 3.6V VDDIN AN = 3.6V	P_{125}	- -	- -	330	

6.6 Oscillator

Table 6-7. ATPL250A 24 MHz Crystal Oscillator Characteristics

Parameter	Test Condition	Symbol	Rating			Unit
			Min	Typ	Max	
Crystal Oscillator frequency	Fundamental	Xtal	24			MHz
External Oscillator Capacitance	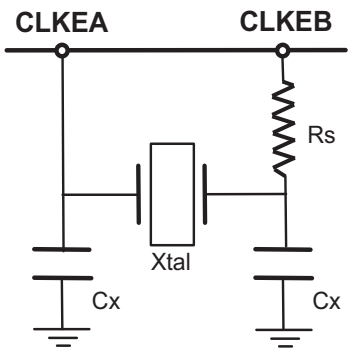	Cx	5	18	30	pF
H-level Input Voltage		XVIH	2	-	VDDIO +0.3	V
L-level Input Voltage		XVIL	-0.3	-	0.8	
External Oscillator Parallel Resistance		Rp	not needed			Ω
External Oscillator Series Resistance		Rs	220			

Notes:
1. The crystal should be located as close as possible to CLKEB and CLKEA pins.
2. Recommended value for Cx is 18 pF and Rs 220 Ω. These values may depend on the specific crystal characteristics.
3. Crystal Stability/Tolerance/Ageing values must be selected according to standard G3 requirements.

Figure 6-5. Oscillator

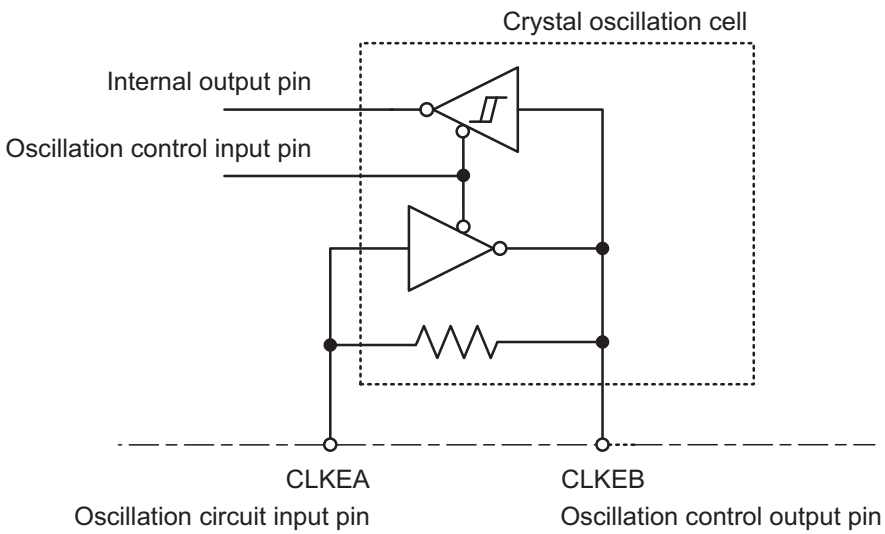

6.7 Power On Considerations

During power-on, PLL INIT pin should be tied to ground during 4 µs at least, in order to ensure proper system start up. After releasing PLL INIT, the system will start no later than 612 µs.

After power-up system can be restarted by means of low active pulse (min 1.65 µs) in ARST or SRST. System full operation starts after 410 µs (ARST pulse) or after 0.9 µs (SRST pulse).

In case of simultaneous tie down of more than one initialization pin the longest time for operation must be respected.

Figure 6-6. Power On timing diagram

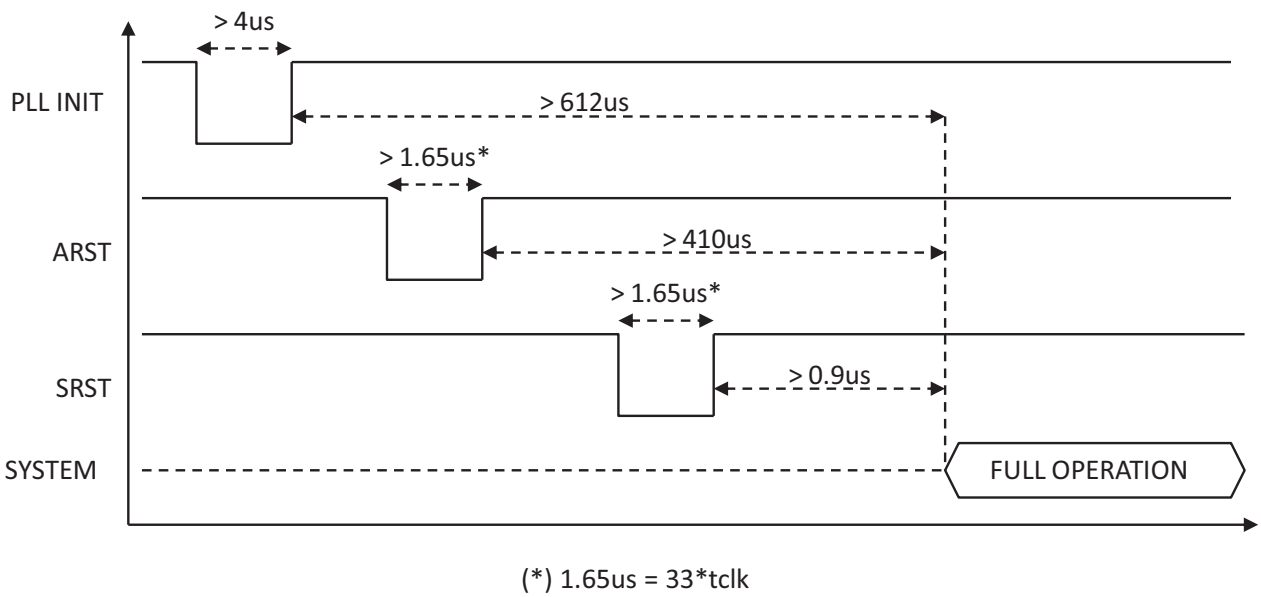

7. Mechanical Characteristics

7.1 LQFP80 Mechanical Characteristics

Figure 7-1. 80 LQFP package dimensions

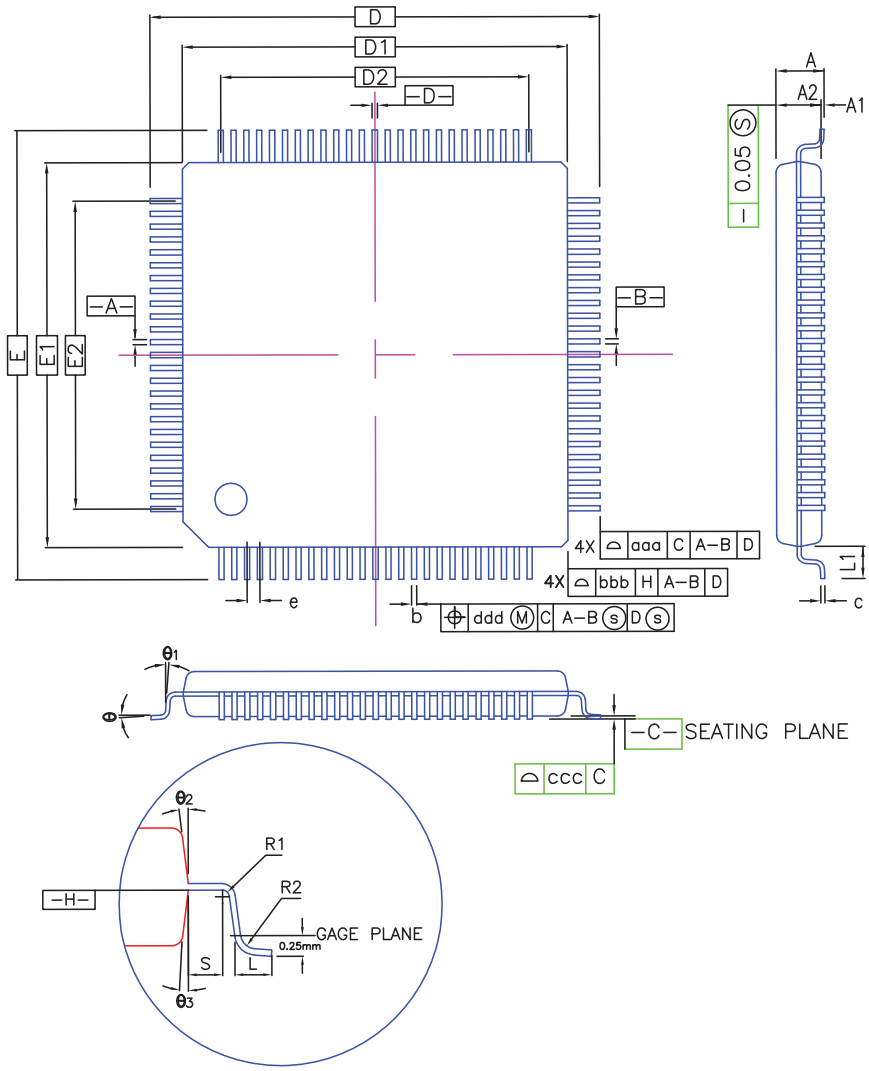

CONTROL DIMENSIONS ARE IN MILLIMETERS.

SYMBOL	MILLIMETER			INCH		
	MIN.	NOM.	MAX.	MIN.	NOM.	MAX.
A	—	—	1.60	—	—	0.063
A_1	0.05	—	0.15	0.002	—	0.006
A_2	1.35	1.40	1.45	0.053	0.055	0.057
D	14.00 BSC.			0.551 BSC.		
D_1	12.00 BSC.			0.472 BSC.		
E	14.00 BSC.			0.551 BSC.		
E_1	12.00 BSC.			0.472 BSC.		
R_2	0.08	—	0.20	0.003	—	0.008
R_1	0.08	—	—	0.003	—	—
θ	0°	3.5°	7°	0°	3.5°	7°
$θ_1$	0°	—	—	0°	—	—
$θ_2$	11°	12°	13°	11°	12°	13°
$θ_3$	11°	12°	13°	11°	12°	13°
c	0.09	—	0.20	0.004	—	0.008
L	0.45	0.60	0.75	0.018	0.024	0.030
L_1	1.00 REF			0.039 REF		
S	0.20	—	—	0.008	—	—

SYMBOL	80L					
	MILLIMETER			INCH		
	MIN.	NOM.	MAX.	MIN.	NOM.	MAX.
b	0.17	0.20	0.27	0.007	0.008	0.011
e	0.50 BSC.			0.020 BSC.		
D2	9.50			0.374		
E2	9.50			0.374		
TOLERANCES OF FORM AND POSITION						
aaa	0.20			0.008		
bbb	0.20			0.008		
ccc	0.08			0.003		
ddd	0.08			0.003		

Table 7-1. LQFP Package Reference

JEDEC Drawing Reference	MS-026

Table 7-2. LQFP Package Characteristics

Moisture Sensitivity Level	3

This package respects the recommendations of the NEMI User Group.

8. Recommended mounting conditions

8.1 Conditions of Standard Reflow

Table 8-1. Recommended mounting conditions of Standard Reflow

Items	Contents	
Method	IR (Infrared Reflow) / Convection	
Times	2	
Floor Life	Before unpacking	Please use within 2 years after production
	From unpacking to second reflow	Within 8 days
	In case over period of floor life	Baking with 125ºC +/- 3ºC for 24hrs +2hrs/-0hrs is required. Then please use within 8 days (please remember baking is up to 2 times).
Floor Life Condition	Between 5ºC and 30ºC and also below 70% RH required. (It is preferred lower humidity in the required temp. range).	

Figure 8-1. LQFP80 package soldering profile

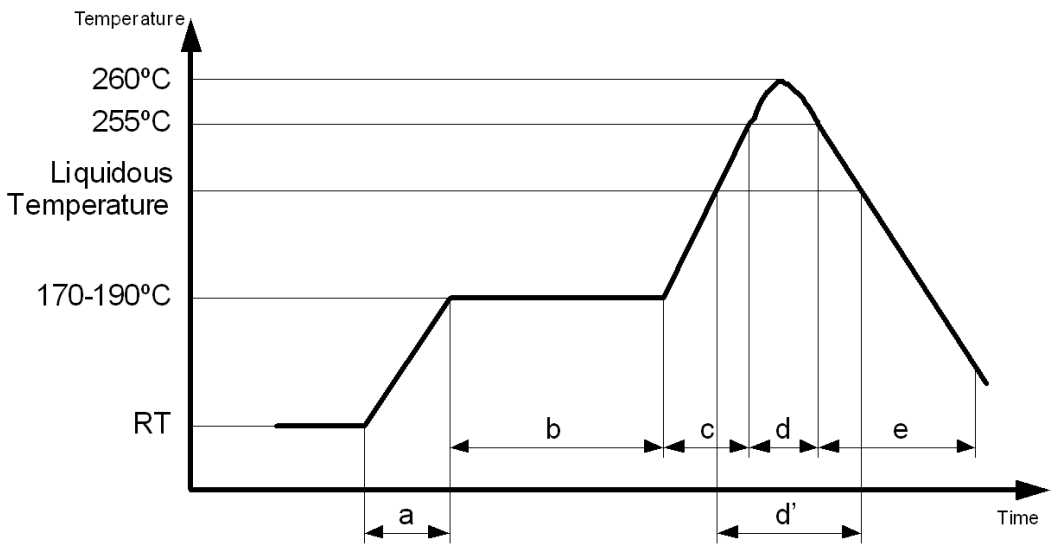

Note: H rank: 260ºC Max

a: Average ramp-up rate: 1ºC/s to 4ºC/s

b: Preheat & Soak: 170ºC to 190ºC, 60s to 180s

c: Average ramp-up rate: 1ºC/s to 4ºC/s

d: Peak temperature: 260ºC Max, up to 255ºC within 10s

d': Liquidous temperature: Up to 230ºC within 40s or
Up to 225ºC within 60s or
Up to 220ºC within 80s

e: Cooling: Natural cooling or forced cooling

8.2 Manual Soldering

Table 8-2. Recommended mounting conditions of Manual Soldering

Items	Contents	
Floor life	Before unpacking	Please use within 2 years after production
	From unpacking to Manual Soldering	Within 2 years after production (No control required for moisture adsorption because it is partial heating)
Floor life condition	Between 5°C and 30°C and also below 70% RH required. (It is preferred lower humidity in the required temp. range).	
Solder Condition	Temperature of soldering iron: Max 400°C, Time: Within 5 seconds/pin. *Be careful for touching package body with iron	

9. Ordering Information

Table 9-1. Ordering Information

Atmel Ordering Code	Package	Package Type	Temperature Range
ATPL250A-AKU-Y	80 LQFP	Pb-Free	Industrial (-40ºC to 85º)
ATPL250A-AKU-R	80 LQFP	Pb-Free	Industrial (-40ºC to 85º)

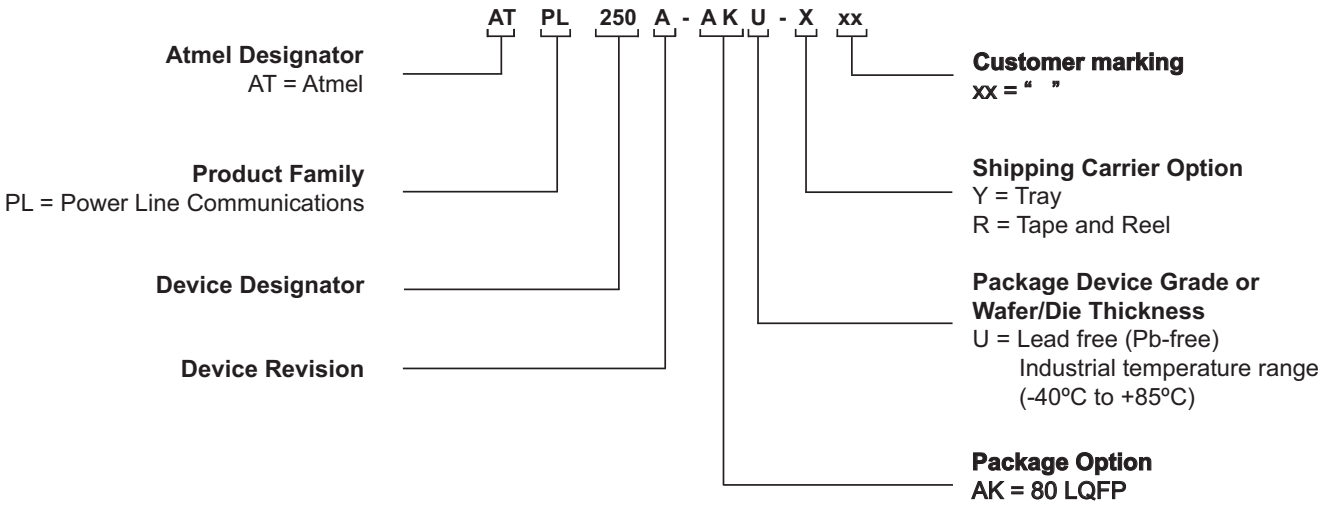

10. Revision History

In the table that follows, the most recent version of the document appears first.

Doc. Rev. 43079	Comments	Change Request Ref.
B	Chapters order redefined. Modified Section 1.1 ”ATPL250A Application Block Diagram” (was Section 8. “Application information”). Figure 1-1 updated: RST and CLKOUT signals introduced. Table 6-6 updated the values of Power Consumption and Power Consumption (worst case). Modified Section 4. ”Analog Front-End” (was “PLC coupling circuitry description”). Deleted Section “Power Considerations”: the information of this section is in Section 3. ”Signal Description”.	
A	First Issue.	

Table of Contents

Description 1

1. Features 2
1.1 ATPL250A Application Block Diagram. 2

2. Block Diagram 3

3. Signal Description 4

4. Analog Front-End 6
4.1 PLC coupling circuitry description 6
4.2 ATPLCOUP reference designs 8
4.3 Zero-crossing detection 8

5. Package and Pinout 9
5.1 80-Lead LQFP Package Outline 9
5.2 80-Lead LQFP Pinout 9

6. Electrical characteristics 10
6.1 Absolute Maximum Ratings 10
6.2 Recommended Operating Conditions 11
6.3 Electrical Pinout 12
6.4 DC Characteristics 13
6.5 Power Consumption 16
6.6 Oscillator 16
6.7 Power On Considerations 17

7. Mechanical Characteristics 18
7.1 LQFP80 Mechanical Characteristics 18

8. Recommended mounting conditions 19
8.1 Conditions of Standard Reflow 19
8.2 Manual Soldering 20

9. Ordering Information 21

10. Revision History 22

Table of Contents 23

Atmel | Enabling Unlimited Possibilities®

Atmel Corporation 1600 Technology Drive, San Jose, CA 95110 USA **T:** (+1)(408) 441.0311 **F:** (+1)(408) 436.4200 | **www.atmel.com**

© 2014 Atmel Corporation. / Rev.: 43079B–ATPL–11/14

Atmel®, Atmel logo and combinations thereof, Enabling Unlimited Possibilities®, and others are registered trademarks or trademarks of Atmel Corporation in U.S. and other countries. Other terms and product names may be trademarks of others.

DISCLAIMER: The information in this document is provided in connection with Atmel products. No license, express or implied, by estoppel or otherwise, to any intellectual property right is granted by this document or in connection with the sale of Atmel products. EXCEPT AS SET FORTH IN THE ATMEL TERMS AND CONDITIONS OF SALES LOCATED ON THE ATMEL WEBSITE, ATMEL ASSUMES NO LIABILITY WHATSOEVER AND DISCLAIMS ANY EXPRESS, IMPLIED OR STATUTORY WARRANTY RELATING TO ITS PRODUCTS INCLUDING, BUT NOT LIMITED TO, THE IMPLIED WARRANTY OF MERCHANTABILITY, FITNESS FOR A PARTICULAR PURPOSE, OR NON-INFRINGEMENT. IN NO EVENT SHALL ATMEL BE LIABLE FOR ANY DIRECT, INDIRECT, CONSEQUENTIAL, PUNITIVE, SPECIAL OR INCIDENTAL DAMAGES (INCLUDING, WITHOUT LIMITATION, DAMAGES FOR LOSS AND PROFITS, BUSINESS INTERRUPTION, OR LOSS OF INFORMATION) ARISING OUT OF THE USE OR INABILITY TO USE THIS DOCUMENT, EVEN IF ATMEL HAS BEEN ADVISED OF THE POSSIBILITY OF SUCH DAMAGES. Atmel makes no representations or warranties with respect to the accuracy or completeness of the contents of this document and reserves the right to make changes to specifications and products descriptions at any time without notice. Atmel does not make any commitment to update the information contained herein. Unless specifically provided otherwise, Atmel products are not suitable for, and shall not be used in, automotive applications. Atmel products are not intended, authorized, or warranted for use as components in applications intended to support or sustain life.

SAFETY-CRITICAL, MILITARY, AND AUTOMOTIVE APPLICATIONS DISCLAIMER: Atmel products are not designed for and will not be used in connection with any applications where the failure of such products would reasonably be expected to result in significant personal injury or death (“Safety-Critical Applications”) without an Atmel officer's specific written consent. Safety-Critical Applications include, without limitation, life support devices and systems, equipment or systems for the operation of nuclear facilities and weapons systems. Atmel products are not designed nor intended for use in military or aerospace applications or environments unless specifically designated by Atmel as military-grade. Atmel products are not designed nor intended for use in automotive applications unless specifically designated by Atmel as automotive-grade.