Quick Start Guide
IRMCS3043

September 15, 2009
Version 1.1

International
IOR Rectifier

Table of Contents

1 System Installation ... 3
1.1 Hardware Installation ... 3
1.1.1 Check All Hardware ... 3
1.1.2 Installation Procedure ... 3
2 Software Installation ... 5
2.1.1 Installing from the CD ... 5
2.1.2 MCEDesigner Startup ... 5
3 Running the System ... 7
3.1 System Power-On ... 7
3.2 Running a Motor with MCEDesigner ... 7
3.2.1 Opening a Motor Configuration File ... 7
3.2.2 Checking Communication Status ... 9
3.2.3 Configure PFC Function ... 9
3.2.4 Configure Motor Function ... 10
3.2.5 System Configuration ... 10
3.2.6 Start/Stop PFC Function and Reference DC Bus Voltage ... 11
3.2.7 Start/Stop Motor Function ... 11
3.2.8 Reference Speed ... 11
3.2.9 Drive Status ... 12
3.2.10 System Start/Stop and Emergency Stop ... 12
4 The Reference Design ... 13
4.1 MCE Simulink Design ... 13
4.2 Sequencing Control in the 8051 Microprocessor ... 15
5 Motor Start-up Support Tools ... 16
5.1 Start-up Flow ... 16
5.2 Drive Parameter Setup ... 16
5.2.1 Parameter Configurator Tool ... 16
5.2.2 Entering System Parameters ... 17
5.2.3 Entering Motor Parameters ... 18
5.2.4 Exporting Parameters ... 19
5.2.5 Importing Parameters ... 20
5.3 Drive Performance Evaluation ... 21
5.3.1 Evaluating Drive Performance ... 21
5.3.2 Diagnostic Mode Functions ... 22

Table of Figures

Figure 1. AC Input Connection ... 3
Figure 2. PFC Inductor Connection ... 4
Figure 3. Motor Wire Connection ... 4
Figure 4. RS232 Connection ... 5
Figure 5. Connection Dialog ... 6
Figure 6. Numeric Display Format Dialog ... 6
Figure 7. Opening a Configuration File ... 7
Figure 8. Three Windows in MCEDesigner ... 8
Figure 9. Communication Status Indicator ... 9
Figure 10. Configure Motor Function ... 10
Figure 11. Setup for Reference Speed Function ... 12
Figure 12. Top Level of the IRMCS3043 Reference Design in Simulink ... 13
Figure 13. Top Level of the PFC Control Loop ... 14
Figure 14. MCE Simulink Design of PFC Voltage Loop ... 14
Figure 15. MCE Simulink Design of PFC Current Loop ... 14
Figure 16. MCE Simulink Design of the Motor 1 Control Loop ... 15
Figure 17. Overview of Drive Commissioning ... 16
Figure 18. MCE Compiler Execution Time Estimates ... 18
Figure 19. Drive Control Modes ... 21

1 System Installation

1.1 Hardware Installation

1.1.1 Check All Hardware

The following hardware pieces are contained in the IRMCS3043 system.

- IRMCS3043 board with integrated heat sink
- Inductor (separated from the PCB)
- Motor 1 (GK6040-6AC31-WE)

NOTE: The demagnetization currents of GK6040-6AC31-WE is 8.4A. By default the Itrip limits for this motor is13.7A. The motor included is for evaluation purposes only and is undersized. Be aware that improper configuration may result in motor demagnetization unless larger current shunts are used to decrease Itrip levels. Alternatively, larger application-type motors can be used that properly match the default Itrip levels.

1.1.2 Installation Procedure

Step 1. Visual Inspection

Visually inspect IRMCS3043 board to check for loose wiring, loose or damaged components or other abnormalities.

Step 2. Input Power Wiring

The kit does not include an AC input cable. Prepare a power contactor switch rated at 250V/10A in series with AC power cables if necessary. Turn off or unplug the power and connect single-phase AC 220V/230V power cables to L/N of J1 connector as shown in Figure 1.

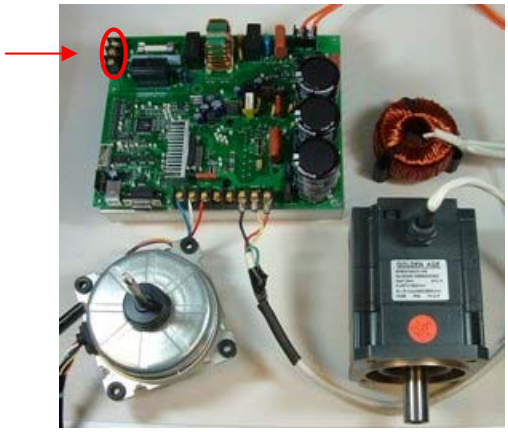

Figure 1. AC Input Connection

Step 3. PFC Inductor Connection
Connect a PFC inductor to J2 connector as shown in Figure 2.

Note: Before you run the PFC, please make sure the inductor is properly connected. Do not short the J2 connector by directly using a wire while you are starting the PFC; or catastrophic damage may occur.

Figure 2. PFC Inductor Connection

Step 4. Motor Wiring
Connect the motor wires to U/V/W of J3 connector as shown in Figure 3.

Figure 3. Motor Wire Connection

Step 5. Connection to Computer
Connect the RS232C cable between computer serial port and 9-pin D-sub connector J7 as shown in Figure 4.

Figure 4. RS232 Connection

2 Software Installation

2.1.1 Installing from the CD
The MCEDesigner™ tool is distributed on the CD-ROM. Load the CD into the CD-ROM drive on a PC and double-click "MCEDesigner.exe".

The automated procedure installs all necessary software on the PC. The default location for the installation is "C:\Program Files\iMOTION".

2.1.2 MCEDesigner Startup
The instructions in this section should be followed the first time MCEDesigner is executed. Refer to the MCEDesigner User's Guide for more information.

Step 1. RS232 Connection
MCEDesigner communicates with the IRMCS3043 using a COM port on the PC. Before you start the application, you should attach an RS232 cable to the DB-9 connector on the reference platform and connect it to an available COM port on your PC. The baud rate is fixed at 57.6Kbps and the signal format is 8 bits, no parity, 1 stop bit.

The first time MCEDesigner runs, a connection dialog (shown in Figure 5) appears with a list of available COM ports on the system. Select the COM port to which RS232 cable is connected.

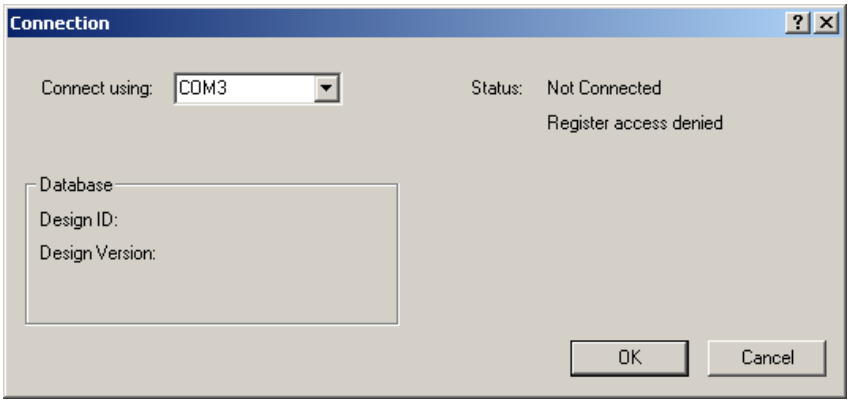

Figure 5. Connection Dialog

When you click OK in the Connection dialog, your selections are saved so they can be used next time you start the application. (The dialog won't appear on startup again.) If you want to change your selections later on, you can access the Connection dialog through the Preferences menu.

The currently configured COM port is shown on the status bar at the bottom of MCEDesigner's main display.

Step 2. Numeric Format

The first time MCEDesigner runs, the Numeric Display Format dialog appears, as shown in Figure 6. This dialog allows user to select either decimal or hexadecimal format for numeric display. Click the blue button to switch between hexadecimal and decimal. After you click OK, MCEDesigner will save the setting so it can be used next time. (The dialog won't appear on startup again.) If you want to change the setting later on, you can access the Numeric Display Format dialog through the Preferences menu.

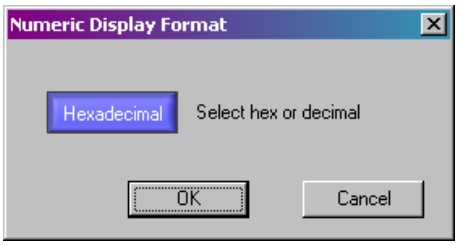

Figure 6. Numeric Display Format Dialog

<u>Important Note</u>: Regardless of which display option you choose, you can always enter values in decimal or hexadecimal. MCEDesigner interprets a value you enter as hexadecimal if it begins with "0x" (0x222), and otherwise as decimal (222).

3 Running the System

3.1 System Power-On

Apply AC power 200V to 230V (recommended voltage range) to the system (IRMCS3043).

Immediately after power-on, the power LED (LED1) at the right corner will turn yellow indicating DC bus voltage is established and the on-board switched-mode power supply is active.

3.2 Running a Motor with MCEDesigner

3.2.1 Opening a Motor Configuration File

For quick start with preconfigured parameters, the following motor is supported with a preconfigured .irc file.

- "Motor 1" - Golden Age GK6040-6AC31-WE (400W, 2000 rpm)

If any other motor is used, reconfiguration is required. Please refer to Section 5 for more information.

Open the "IRMCS3043_Release2_1.irc" configuration file from MCEDesigner.

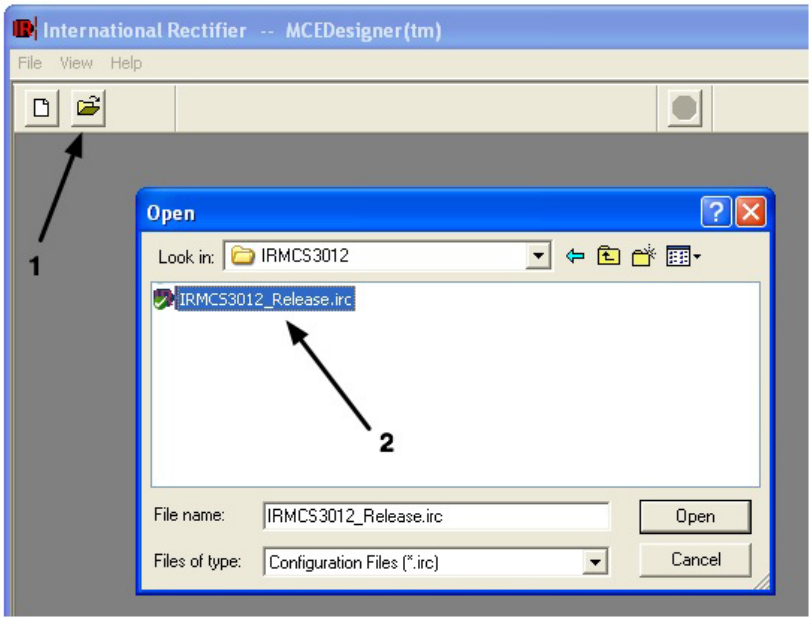

Figure 7. Opening a Configuration File

Then, you will see four windows: System, PFC, and Motor1. Move your mouse to the "System" window first and go to the "Window" menu, choose "Tile", then you will see a clear view of the three windows (Figure 8). Basically you can move your mouse to these three windows, to configure and operate each control element.

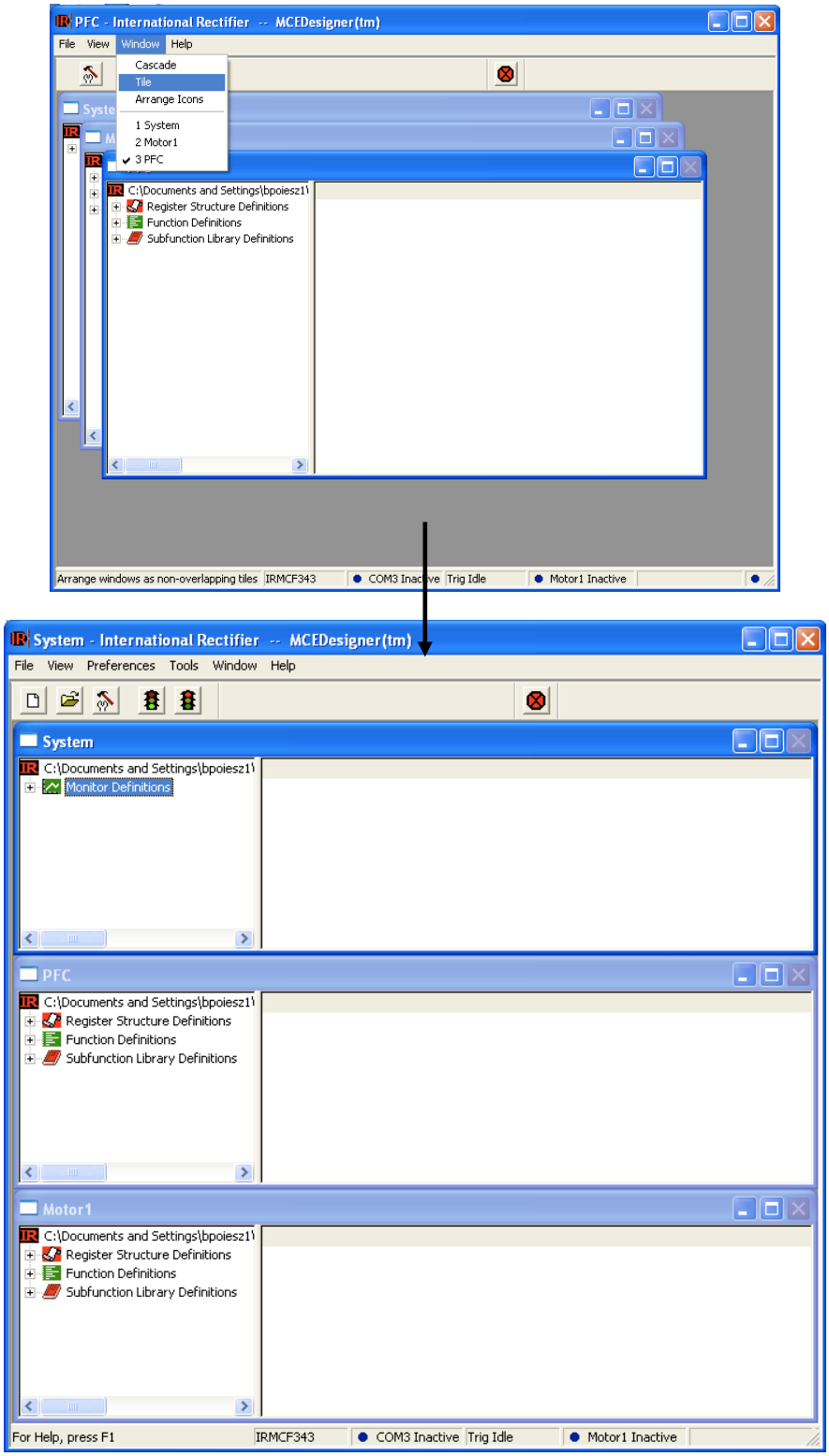

Figure 8. Three Windows in MCEDesigner

3.2.2 Checking Communication Status

When you open a configuration file, MCEDesigner attempts to establish contact with the IRMCS3043. If MCEDesigner receives a reply to its message, the COM port status shows "Up" (Green). If no reply is received, the status stays "Inactive" (Blue). If the status is inactive, it usually means the reference platform is not powered on, the RS232 cable is not connected, or the cable is connected to the wrong COM port.

Figure 9 shows how communication status should appear before you continue your testing.

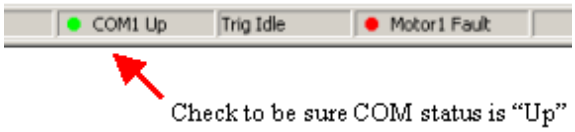

Figure 9. Communication Status Indicator

If MCEDesigner loses communication with IRMCS3043 after COM port has been "Up", the status will change to "Down" (Yellow) instead of "Inactive".

Note: MCEDesigner Version 1.0.7.7 and earlier cannot recognize a COM port higher than 9 and will give an error, "No such port." This can happen when using a USB-to-Serial adapter.
To manually change the port number:

> Go to Device Manager, open Ports (COM & LPT) and find the serial adapter. Right-click and select Properties; click the Port Settings tab, then the Advanced button, and in the Advanced Settings window there should be a COM Port Number selection. Choose a port number 0 - 9.

This bug has been corrected for MCEDesigner version installed with iMotion Design Kit Version 1.4 and greater.

3.2.3 Configure PFC Function

The Configure PFC function is one of the predefined operations in MCEDesigner's Function Definitions section, in the "PFC" window. This function initializes the host registers for normal PFC operation. Move your mouse to the PFC window. If you click the Configure PFC entry in the tree view, a list of the sub-functions and registers that are written when this operation is executed is displayed in the right pane of the main window.

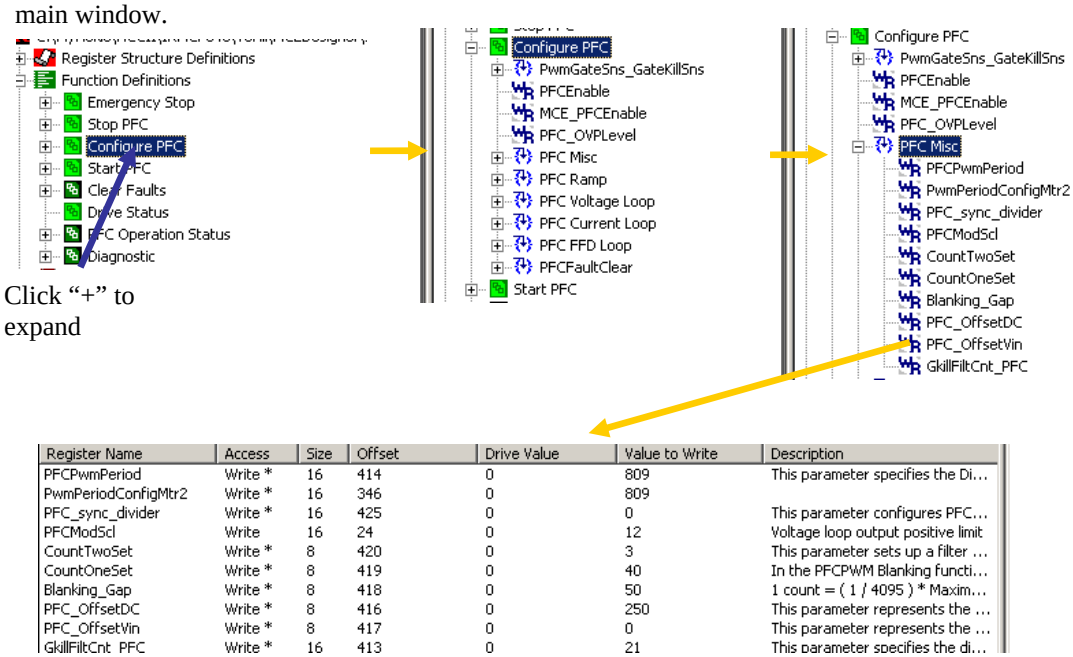

Register Name	Access	Size	Offset	Drive Value	Value to Write	Description
PFCPwmPeriod	Write *	16	414	0	809	This parameter specifies the Di...
PwmPeriodConfigMtr2	Write *	16	346	0	809	
PFC_sync_divider	Write *	16	425	0	0	This parameter configures PFC...
PFCModScl	Write	16	24	0	12	Voltage loop output positive limit
CountTwoSet	Write *	8	420	0	3	This parameter sets up a filter ...
CountOneSet	Write *	8	419	0	40	In the PFCPWM Blanking functi...
Blanking_Gap	Write *	8	418	0	50	1 count = (1 / 4095) * Maxim...
PFC_OffsetDC	Write *	8	416	0	250	This parameter represents the ...
PFC_OffsetVin	Write *	8	417	0	0	This parameter represents the ...
GkillFiltCnt_PFC	Write *	16	413	0	21	This parameter specifies the di...

Figure 12. Configure PFC Function

To execute *only* the Configure PFC function, click in the PFC window and then click the Configure Motor toolbar button (the icon shows a hammer and wrench), or double-click the Configure PFC entry in the tree view of the PFC window.

3.2.4 Configure Motor Function

Similarly, the Configure Motor function is one of the pre-defined operations in MCEDesigner's Function Definitions section, in the "Motor 1" window. This function initializes the host registers for normal operation. Move your mouse to the Motor 1 window. If you click the Configure Motor entry in the tree view, a list of the sub-functions and registers that are written when this operation is executed is displayed in the right pane of the main window.

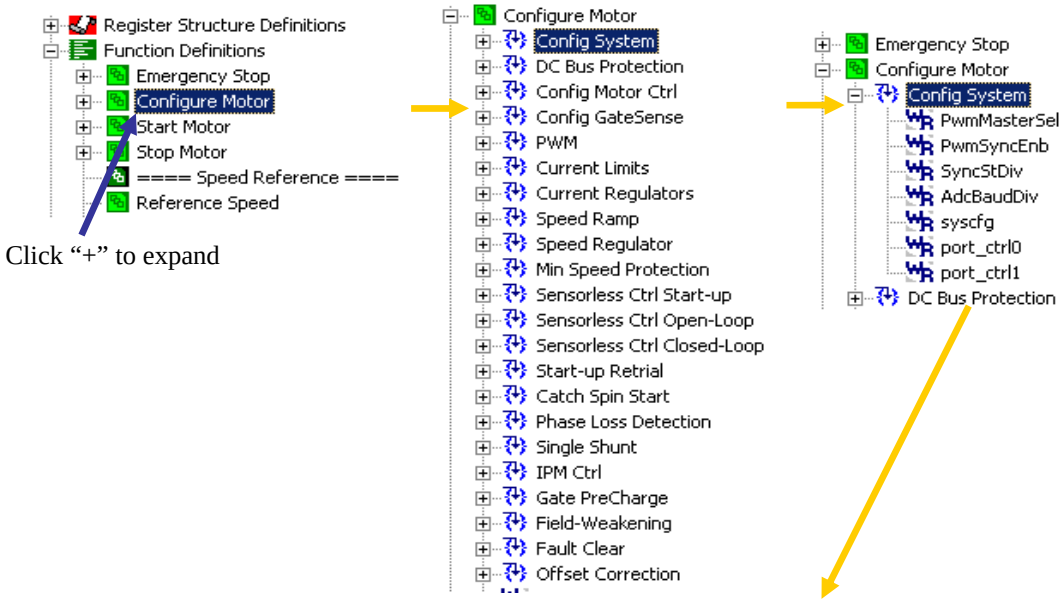

Register Name	Access	Size	Offset	Drive Value	Value to Write	Description
PwmMasterSel	Write *	16	256	0	0	0 = Select Mot
PwmSyncEnb	Write *	16	257	0	0	0 - Disable PWI
SyncStDiv	Write *	16	258	0	767	1 = 1 / SysClk
AdcBaudDiv	Write *	16	259	0	8	SysClk / 6 MHz
syscfg	Write *	16	262	0	7	This register is
port_ctrl0	Write *	16	260	0	0	This parameter
port_ctrl1	Write *	16	261	0	0	This parameter

Figure 10. Configure Motor Function

The "Value to Write" column shows the value that will be written to each register. You can click the "+" symbol to the left of the Configure Motor function to access detailed information about each of the registers.

To execute *only* the Configure Motor function, click in the Motor 1 window and then click the Configure Motor toolbar button (the icon shows a hammer and wrench), or double-click on the Configure Motor entry in the tree view of the Motor 1 window.

3.2.5 System Configuration

You can configure both the PFC and motor control registers in one step from the "System" window.

Click in the System window and then click the Configure Motor toolbar button (the icon shows a hammer and wrench). This will execute the "Configure PFC" function in the PFC window and the "Configure Motor Function" in the Motor 1 window sequentially.

3.2.6 Start/Stop PFC Function and Reference DC Bus Voltage

Start PFC and Stop PFC functions are pre-defined Function Definitions in the PFC window.

Note: Before you run the PFC, please make sure the inductor is properly connected. Do not short the J2 connector by directly using a wire while you are starting the PFC; or catastrophic damage may occur.

To start the PFC, click in the PFC window and then click the Start Motor toolbar button (the green traffic signal) or double-click the Start PFC entry in the tree view.

To stop the PFC, click in the PFC window and then click the Stop Motor toolbar button (the red traffic signal) or double-click the Stop PFC entry in the tree view.

Please note that the PFC is an integrated control element of the motor drive system, and it is recommended to Start PFC prior to starting the motor. If you are evaluating PFC separately with a resistive load (by connecting a resistive load to J4 connector), you should start the PFC under a no load condition. Normally you can insert a mechanical switch between the resistive load and the DC bus and use this switch to connect/disconnect the load to the DC bus. Alternatively, you may use an electronic load that can increase DC bus power starting from zero Watts. After the PFC has been enabled, you can increase the load. If you start the PFC under loading conditions, the PFC circuit will still work, and the DC bus voltage can still be regulated according to the reference, but the current control performance may be degraded, and the PFC current waveform can be distorted.

3.2.7 Start/Stop Motor Function

Start Motor and Stop Motor functions are also pre-defined Function Definitions, in the Motor 1 or Motor 2 window.

To start the motor, click in the Motor 1 window and then click the Start Motor toolbar button (the green traffic signal) or double-click the Start Motor entry in the tree view.

To stop the motor, click the Stop Motor toolbar button (the red traffic signal) or double-click the Stop Motor entry in the tree view. It should be noticed that Start/Stop sequence including initiating catch spin and ramp stop needs to be implemented in 8051 software for each application. The preloaded software doesn't have this sequence logic. When you execute the Stop Motor function, the motor is stopped immediately. Therefore, if you run the motor with PFC together under a heavy loading condition, it is recommended to reduce the motor speed and/or loading to the minimum before executing the Stop Motor function; or else the DC bus voltage may have a sudden increase due to the relatively slow band width of the PFC voltage loop.

3.2.8 Reference Speed

MCEDesigner provides a special built-in function that allows you to easily control the motor's reference speed and direction. To modify the settings, see Figure 11. First, locate the "Reference Speed" entry in the Function Definitions section of the tree view. Right-click on the entry and select Properties. In the Properties window, you can enter the desired speed in RPM.

After entering a speed, click OK in the window. Click "Start Motor" if it's not running and then **double-click the "Reference Speed"** entry in the tree view to change the speed. MCEDesigner calculates the appropriate value to be written the host register (based on your specified speed) and performs the write operation to "TargetSpeed" register.

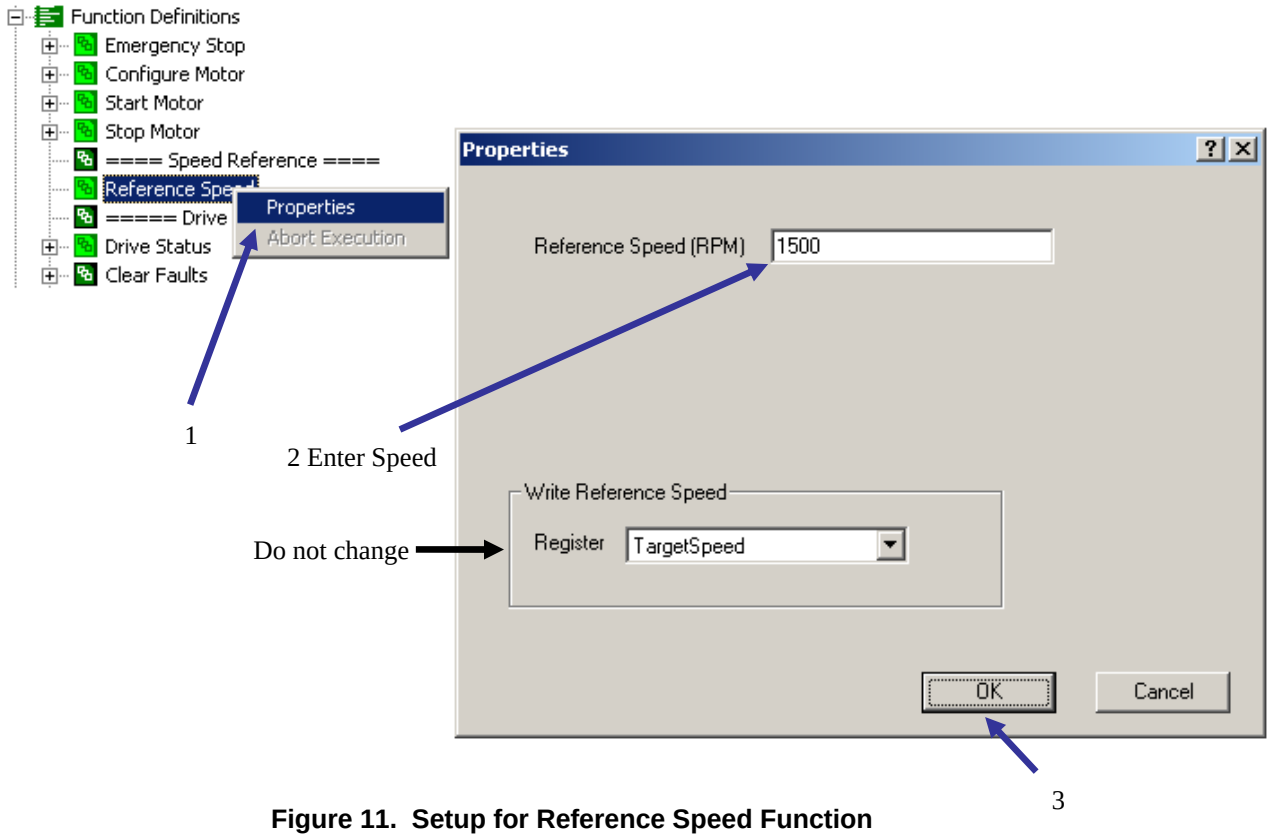

Figure 11. Setup for Reference Speed Function

3.2.9 Drive Status

The Info button on the toolbar (letter "i") executes the pre-defined Drive Status function, which reads a group of host registers associated with the function.

To get drive status, click the Info button and then click on "Drive Status" in the tree view. In the right pane of the main window, the values read from the Drive Status registers are shown in the Current Value column. You may need to refresh the right pane of the main window by selecting any other entry in the tree view and then clicking on "Drive Status" in the tree view again.

3.2.10 System Start/Stop and Emergency Stop

System Start/Stop functions can be performed from the System window to start and stop the PFC and motor in the proper sequence.

Click in the System window and then click the Start Motor toolbar button (the green traffic signal). This will execute the Start PFC function first and then the Start Motor function (sequentially), and will ensure the PFC is enabled before the motor is started.

Click in the System window and then click the Stop Motor toolbar button (the red traffic signal). This will execute the Stop Motor function first and then the Stop PFC function (sequentially). Again, when you execute the Stop Motor function, the motor is stopped immediately. Therefore, it is recommended to reduce the motor speed (by reducing the Reference Speed) and/or loading to the minimum before executing the Stop Motor function; or else the DC bus voltage may have a sudden increase. This is only necessary when running the motor in the field-weakening range.

The emergency stop function immediately stops all components. When you click the Emergency Stop toolbar button, the Emergency Stop function is executed for all components regardless of which window is currently active. If you double-click the Emergency Stop entry in the tree view of *any one* of the component windows, the Emergency Stop function is executed for *all components*.

4 The Reference Design

4.1 MCE Simulink Design

The IRMCS3043 controls PFC and one sensorless motor drives simultaneously. The MCE Simulink design consists of a PFC loop and a motor loop, as shown in Figure 12. The MCE design is pre-loaded to the IRMCS3043. Below a few choice sections of the Simulink design are highlighted.

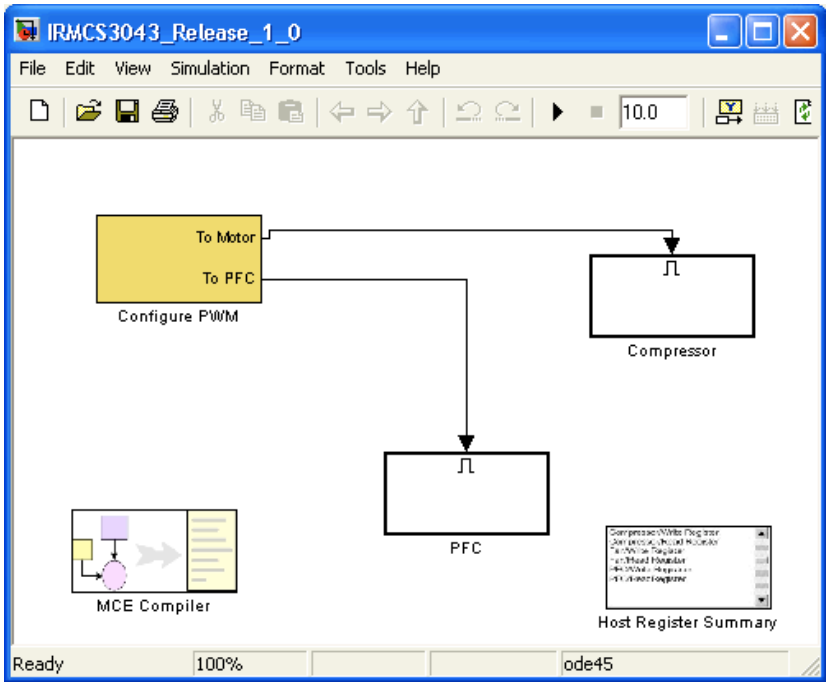

Figure 12. Top Level of the IRMCS3043 Reference Design in Simulink

The reference PFC loop consists of a voltage loop and a current loop (Figure 13), and each loop is implemented by MCE blocks including “PI”, “LIMIT”, “LOWPASS_FILT”, “RAMP”, etc., as shown in Figure 14 and Figure 15.

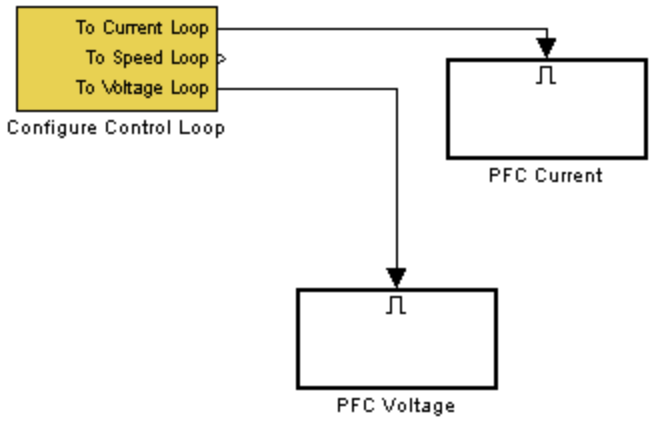

Figure 13. Top Level of the PFC Control Loop

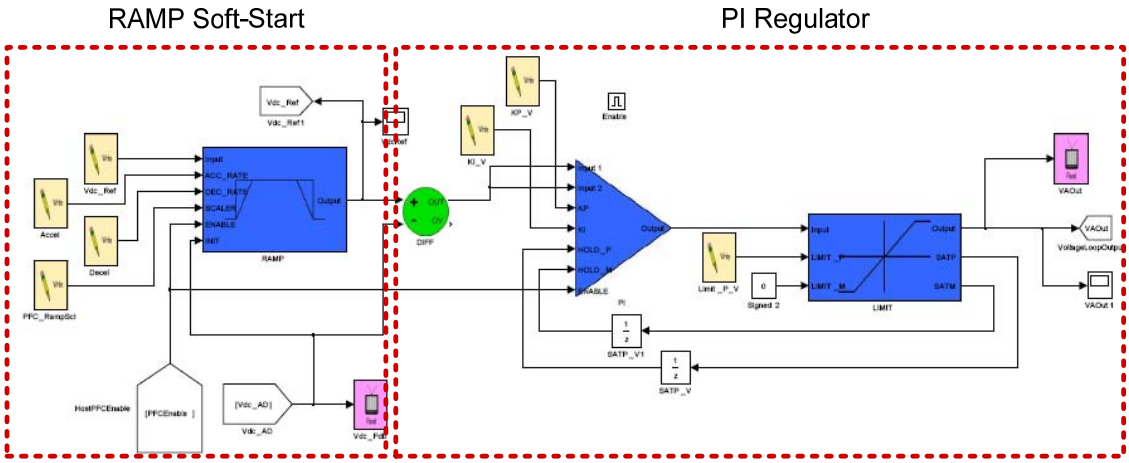

Figure 14. MCE Simulink Design of PFC Voltage Loop

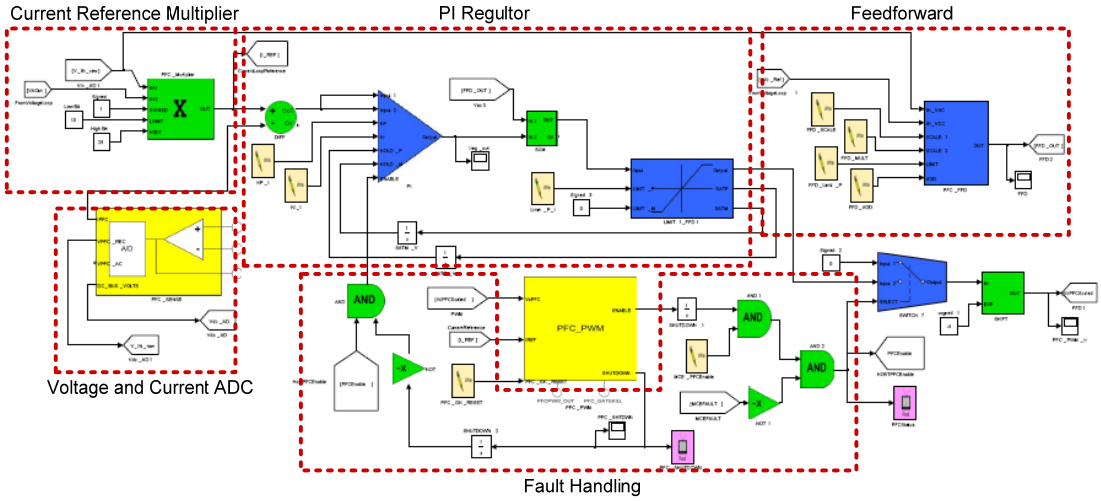

Figure 15. MCE Simulink Design of PFC Current Loop

Figure 16 is a block diagram of the MCE design of the motor 1 control loop.

- Angle estimator and reluctance torque control for interior permanent magnet motor is implemented in the SENSORLESS_FOC block.
- Speed loop control is implemented in this Simulink design file by using 'PI', 'LIMIT', 'LOWPASS_FILT', 'RAMP' and some other blocks.
- As shown in the diagram, the lower left section of the design contains the logic for field weakening control. It generates optimal D-axis current command based on voltage margin for current regulator.
- The lower right section contains DC bus protection logic. It compares DC bus voltage feedback with trip levels and generates MCE Fault and latch signals for each trip.

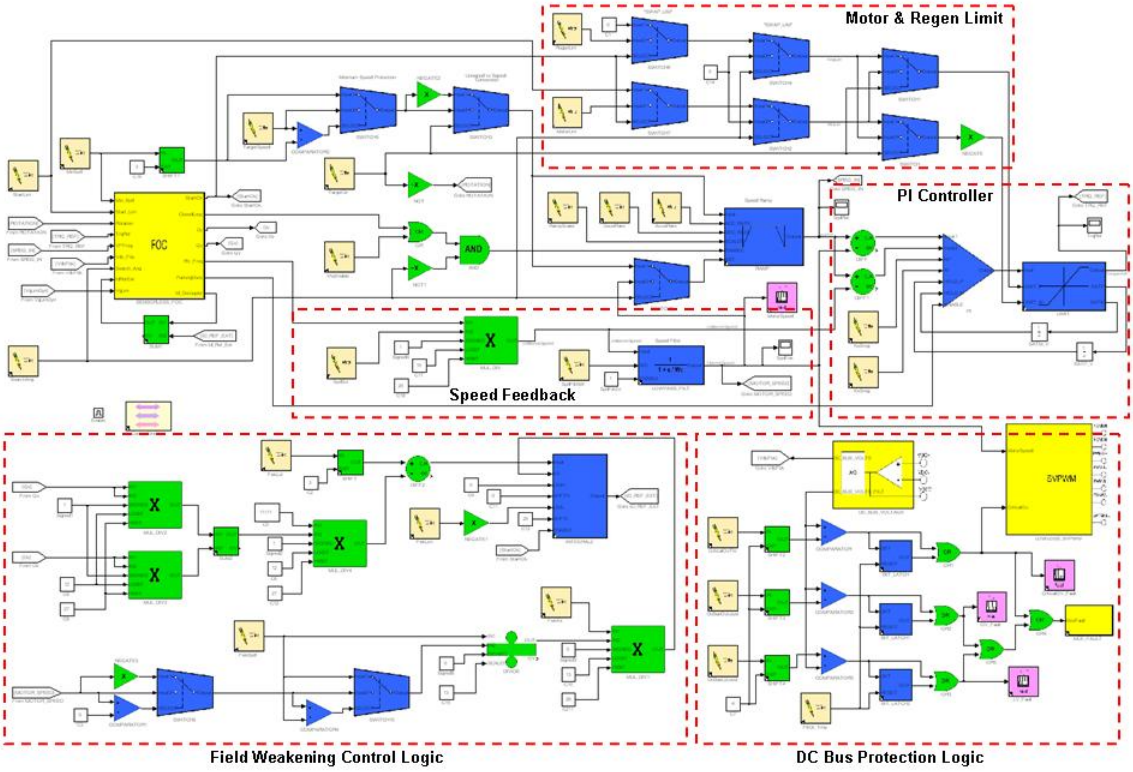

Figure 16. MCE Simulink Design of the Motor 1 Control Loop

4.2 Sequencing Control in the 8051 Microprocessor

Start/Stop sequence including initiating catch spin and ramp stop needs to be implemented by 8051 software as required by the application. The preloaded software doesn't provide this sequence logic. An example of this sequencing can be seen in the IRSamples 8051 code.

5 Motor Start-up Support Tools

5.1 Start-up Flow

After the user is familiar with the IRMCS3034 system, the start-up procedure provided in this section can be used to guide the user through the commissioning of a particular motor application. Configurable parameters are required to tailor the design to various applications (motor and load). These configurable parameters can be modified via the host register interface using the MCEDesigner tool. A Parameter Configurator tool (Excel spreadsheet) is provided to aid the user for ease of drive start-up. High-level parameters such as motor nameplate information, maximum application speed, current limit, speed, and speed regulator bandwidth are entered into the Parameter Configurator and translated to engineering parameters (directly used by the drive). Figure 17 gives an overview of the commissioning steps.

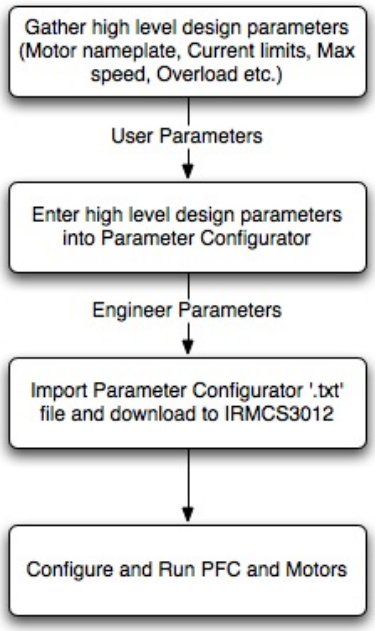

Figure 17. Overview of Drive Commissioning

5.2 Drive Parameter Setup

5.2.1 Parameter Configurator Tool

The IRMCS3043 support software includes a Parameter Configurator (Excel workbook file) that partially automates the procedure of calculating the appropriate values for configuration and tuning parameters. In the Parameter Configurator, the user enters motor nameplate data and parameters specific to his application, and Excel formulas calculate the appropriate values for certain write registers. In Excel, the "Save As…" function is used to export the register values to a text file, and in MCEDesigner, the text file can be imported to fill in the register values. Then, when the "Configure Motor" function is executed in MCEDesigner, the values are written to the IRMCF343.

The Excel workbook file that implements the Parameter Configurator is named "Parameter Configurator.xls". Double click the file to open it in Excel. At the bottom of the workbook window, there are five sheet tabs, which select the worksheet to be displayed.

System Entries Tab
The first tab is the "System Entries" Page where the clock frequencies of the MCE, Motor 1, and PFC can be configured. This is also the page to configure the DC Bus voltage levels and feedback scaling. At the bottom of the page there is an 'Optional Information' section where you may enter the Motor 1 and PFC clock cycle values from the Web Compiler. By entering these values the spreadsheet will calculate your MCE usage so that you know how much programming headroom you have remaining.
There are a number of warning messages that will appear on this screen if incompatible parameter settings have been made. It is important to follow these warnings as the system may not perform as desired.

Motor 1 Entries Tab
The Motor 1 Entries Tab is where the motor nameplate data can be entered, along with specific Motor 1 configuration options can be set. There is both hardware dependent and independent configuration options available on this page. Please read the parameter descriptions before modifying hardware dependant values as they have already been customized for this platform.

PFC Entries Tab
This page is where the inductor size, gate sense, and current feedback options can be configured for the PFC. All of these parameters are hardware dependent and do not need modification unless the PCB has been customized.

Parameter Export Tab
This worksheet shows the calculated write register values and is the sheet that needs to be exported for use in MCEDesigner.

It should be emphasized that the power rating of the example motor (Golden Age GK6040-6AC31-WE) is only 400W, and it mainly serves as an example of how to use the worksheet rather than as an actual motor for practical applications. The IRMCS3043 is capable of continuously input power of 1.5kW together with PFC control. The PFC current waveforms normally tend to have lower distortion and higher power factor under heavier load conditions. If you use the IRMCS3043 to drive the unloaded 400-W motor, you should see PFC current waveform with relatively high distortion and low power factor, although the harmonic will still be under the IEC/EN61000-3-2 Class A limits. This is a normal PFC behavior.

5.2.2 Entering System Parameters

Step 1. Select Master Clock Frequency
Select the desired Master Clock Frequency. Normally you can start with 50Mhz and then after performing the following steps you can increase this frequency and test if it is compatible with the requested PWM frequencies.

Step 2. Determine PWM Frequencies
The PFC frequency is used to generate the Motor 1 PWM frequency. First enter the desired PFC PWM frequency, followed by the ratios for Motor 1. The resulting PWM frequencies will be shown below. The speadsheet ensures that the resulting frequency are exact multiples of one another so that no synchronization errors can occur.

Step 3. Enter Bus Voltages
Next enter the DC Bus information. It is important to note that the Nominal DC Bus Voltage is the regulation set point of the boost PFC. This voltage will be the DC Bus Voltage when PFC is enabled.

Step 4. Enter DC Bus Feedback Scaling
The DC Bus Feedback is determined by hardware and it is important that this scaling is correct. If an incorrect value is used the DC Bus Voltage PFC regulation point may be significantly higher than intended.

Step 5. Enter Optional Execution Breakdown information
This step is optional, but very important as it aids in determining if the MCE frequency is high enough to complete the Motor 1 and PFC loops within the Motor 1 (PWM Sync) frequency. If the total MCE Usage

increases beyond 95% a warning will appear. These values can be obtained from the MCE Web Compiler output screen as shown below.

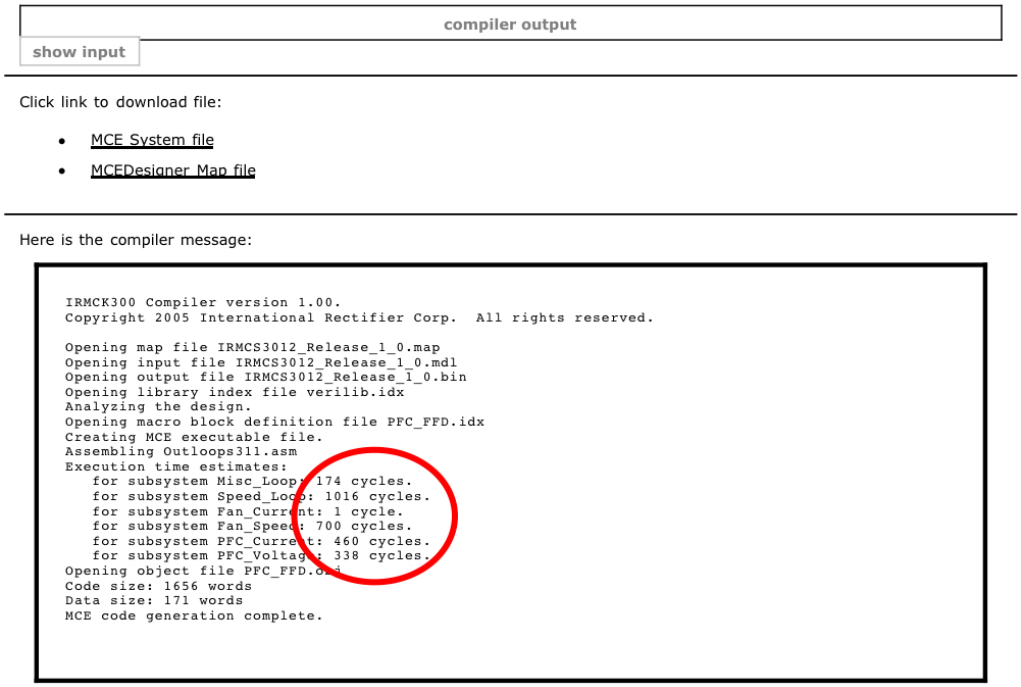

Figure 18. MCE Compiler Execution Time Estimates

Step 6. Adjust Master Clock Frequency
After entering all of the other system parameters you can come back to the Master Clock frequency to either increase or decrease to your desired levels. If a level is too high or too low the spreadsheet will now be able to accurately tell you what settings need adjustments.

5.2.3 Entering Motor Parameters

The first stage of configuring drive parameters involves entering the correct settings for a specific motor and custom application requirements.

Step 1. Initialize a motor setup sheet for the motor.
Click on the "Motor 1" sheet tab to select the motor setup worksheet. If desired, double-click the sheet tab and change the tab title to identify the motor. The first line of the motor setup worksheet describes the motor. Double click on column B and enter a description of the motor. (The description is optional; it's not used in the calculations and is not exported to MCEDesigner.)

Step 2. Enter Motor Information.
The motor information section of the "User Entries" worksheet contains parameter settings that should be available in the motor's datasheet or on its nameplate. To enter a value for each parameter, double click in column B on the same line as the parameter name. When the mouse is floated over column B for each parameter, a short description of the parameter is shown in a help bubble.

Step 3. Enter Application Information
The application information section of the "User Entries" worksheet contains parameter settings that describe the requirements of a specific application. As before when the mouse is moved over column B for each parameter, a short description of the parameter is shown in a help bubble.

Step 4. Enter Advanced Information (Optional)
The advanced information section of the motor setup worksheet contains parameter settings for current regulators, PWM settings and internal scale. Please refer to User's guide for more information.

Step 5. Enter Advanced Information (Hardware Dependent)
The advanced information section of the motor setup worksheet contains parameter settings that are specific to the hardware platform. **It is not necessary to modify these settings for use with the IRMCS3043 system.** Please refer to the IRMCx3xx User's Guide for more information.

5.2.4 Exporting Parameters

In the second stage of configuring drive parameters, the parameter settings selected in the previous section are used to calculate values for a number of IRMCF343 write registers. The write register values are written to a text file in a specific format defined for use with MCEDesigner.

Step 1. Save the Settings
When all parameters are set appropriately, select Save from Excel's File menu to save the workbook file in ".xls" format.

Step 2. Export Drive Parameters
Click on the Parameter Export tab at the bottom of the workbook window. This worksheet shows the register values that were calculated as settings were changed in the motor setup worksheet. From Excel's File menu, select "Save As…". In the Save As dialog, select Save as type: "Text (Tab delimited) (*.txt)" as shown below. Then browse to the folder where the exported drive parameters file is to be saved, specify a file name, and click Save.

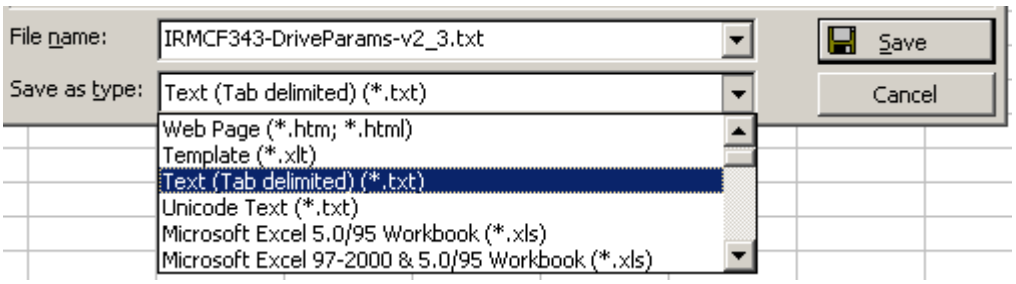

Click "OK" when the following warning message appears:

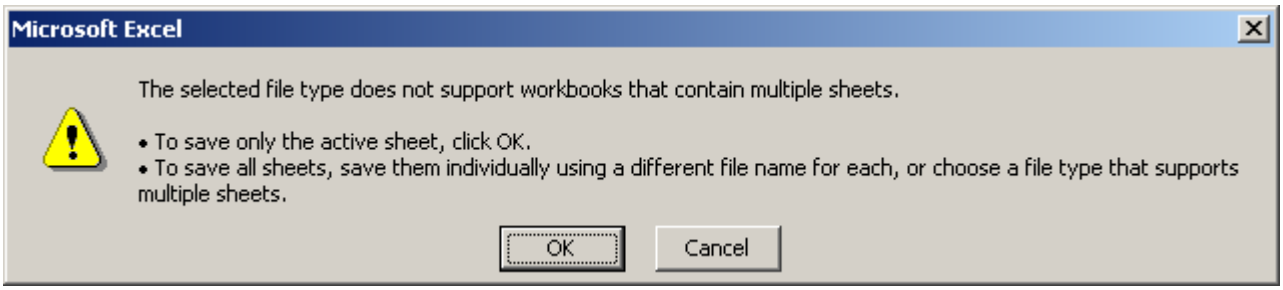

Click "Yes" when this warning message appears:

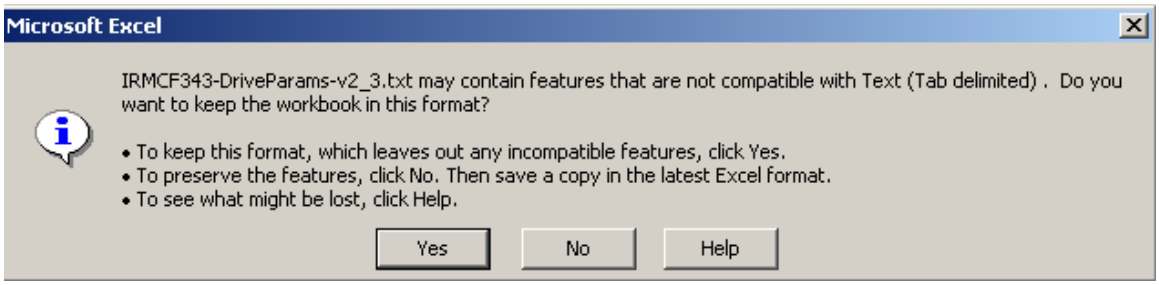

5.2.5 Importing Parameters

The final stage of drive parameter configuration involves loading the drive parameter settings into an MCEDesigner database and writing the registers to the IRMCF343, as well as synchronization with the PFC control. For information about how to use MCEDesigner, refer to the MCEDesigner User's Guide.

The text file exported from the Parameter Configurator contains two sections: Parameters and Registers.

The Parameters Section

The Parameters section specifies motor configuration parameters, which are saved in the MCEDesigner configuration file (.irc file). In MCEDesigner, the settings can be viewed and modified by selecting Motor Configuration from the Preferences menu while the Motor 1 window is active. When the drive parameters text file is imported into MCEDesigner, the motor configuration parameters in the import text file always replace the current settings in the MCEDesigner database.

The Registers Section

Each of the entries in the Register section of the file identifies a write register and a value to be stored in the register. In an MCEDesigner database, there are several locations where each register value can be used:

- In the register definition, the "Value to Write" is written to the corresponding IRMCF343 register when the register entry is double clicked.
- In the Function Definitions section, one or more functions may write the register value to the IRMCF343. (A function is set up to perform a sequence of operations automatically.)

When the drive parameters text file is imported into MCEDesigner, there are several options for updating any or all of these register settings with the value specified in the file.

<u>Updating System Parameters</u>

Step 1. Run MCEDesigner and Open a Database

Start MCEDesigner and select "Open" from the File menu. MCEDesigner configuration files have the file extension ".irc". Browse to locate a MCEDesigner configuration file and open it. (To create a custom configuration file to use with a specific project, it's recommended to make a copy of the example file included with the release.)

Step 2. Import Drive Parameters

Click on the Motor1 window and then from the File menu, select "Import Drive Parameters". Browse to locate the text file that was exported from the Parameter Configurator and click "Open" to open it. In the Import Drive Parameters window, select one of the three available modes and click OK. Depending on the selected mode, MCEDesigner may prompt for confirmation before modifying each register setting or group of settings. Normally the selected import mode does not need changing.

Step 3. Save the New Settings

The Import Drive Parameters function in MCEDesigner updates register values in the .irc file that's currently open. To save the new settings in the configuration .irc file, click on the System window and then select "Save" from the File menu before exiting MCEDesigner. If this is not done, the updates will be lost,

and the Import Drive Parameters function will need to be repeated next time the configuration file is opened.

Step 4. Write the Settings to the IRMCF343
The Import Drive Parameters function does not write any values to the IRMCF343; it simply updates the register settings in the .irc file. To transfer the register settings to the IRMCF343, it is necessary to either double click each write register individually (not recommended) or execute a function that writes the registers automatically. The "Configure Motor" function is pre-defined for this purpose. To execute the "Configure Motor" function, click on the Motor 1 window and then click the hammer icon on the toolbar, or double click "Configure Motor" in the Function Definitions section of the tree view.

5.3 Drive Performance Evaluation

5.3.1 Evaluating Drive Performance

The drive parameter translation, as described in the previous section, is the first step of drive commissioning. It is expected that the user parameter entries such as motor nameplate information and load inertia will have some error. This is typical due to the inaccuracy in motor datasheet and load information. The drive performance can be further refined by going through drive diagnostics as described in Section 5.3.2.

For motor control purposes, the rotor angle information is required to optimally control a Permanent Magnet AC motor. In the IRMCF343, the control is performed without any feedback from position sensor such as shaft encoder. The rotor angle is estimated utilizing motor phase (U, V, W) current and DC bus voltage feedback information.

In the IRMCF343 drive controller, there are three control modes (Figure 19) for estimation of the rotor angle for the entire speed range including zero speed. During motor start-up phase, the controller will go through these three control modes in sequence. These control modes are described below.

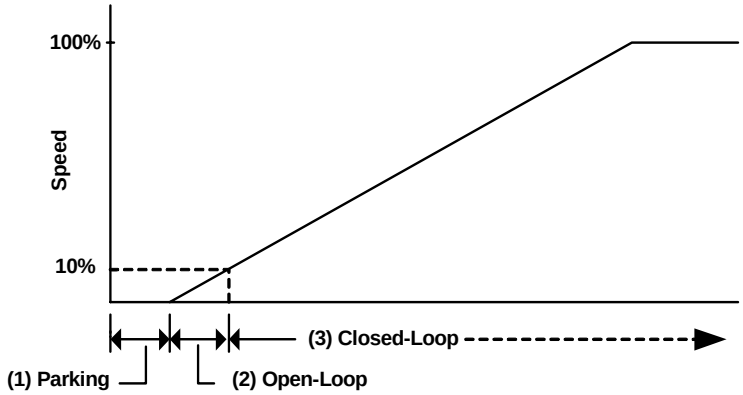

Figure 19. Drive Control Modes

1) Parking – The initial rotor angle is identified by forcing DC current into the motor and hence forcing the motor shaft to park at a certain prescribed angle.

2) Open-loop – Immediately after Parking stage, the rotor angle is estimated in an open-loop fashion, which utilizes a simple motor-load mechanical model to estimate the rotor angle (estimate load characteristics). If the mismatch between the external load characteristics and the internal motor-load model is exceedingly large, start-up performance will suffer.

3) Closed-loop – Motor speed increases during start-up; the back EMF voltage from motor also builds up due to the increase in speed. Useful information for rotor angle estimation can be then be extracted from the back EMF voltage (estimated by using motor current and DC bus voltage). The drive will enter Closed-loop control mode as shown in Figure 19.

5.3.2 Diagnostic Mode Functions

Diagnostic mode functions are provided in the MCEDesigner tool to fine tune drive performance.

Parking Diagnostic (Located in Motor 1)

With the Parking diagnostic, the optimal Parking current (ParkI) and the Parking time duration (ParkTm) can be readily determined. In addition, current controller and current feedback can also be verified. When the Parking Diagnostic function is executed, the drive is forced to stay in Parking state for ten seconds, followed by a stop. The diagnostic can be stopped anytime by executing the Stop Motor function. The characteristic of parking depends on the amount of dc current injection.

It is possible to verify current control by observing the actual current flowing through the motor windings using current sensing instrumentation (current probe). The amount of parking current injected to the motor is controlled by parameter ParkI. The full scale of ParkI is 255 digital counts, which represents 86.7% rated motor current (in peak Amps). During motor parking, dc current is injected (by inverter) into the motor; the current magnitude in each phase depends on the parking angle.

If an exceedingly large value of ParkI is used, the motor shaft will hunt during parking. This will increase the time for the rotor shaft to settle and hence increase parking time. Systems with a higher inertia to friction ratio will tend to hunt more. Therefore, it is recommended to start with a lower value (say 4% ParkI = 12).

The user can experience the effect of using different ParkI values. It may be noticed that the parking characteristics will also depend on the initial rotor angle (when the drive is off). Therefore, the shaft should be rotated (manually, while the drive is off) to a different position before each parking evaluation. It is recommend to use the highest possible value (not to cause excessive motor hunting) of ParkI such that the duration of parking can be minimized. Once the optimal parking current (ParkI) is determined, please note the time required for the motor shaft to settle during parking. This time duration is the optimal parking time and should be converted to digital drive units and entered into register ParkTm. The full scale of ParkTm is 255, which represents 4 seconds.

After the parking diagnostic has been accomplished, please enter these two parameters (ParkI and ParkTm) into the “Sensorless Ctrl Start-up” subfunction inside the “Configure Motor” function.

Note: To resume normal mode operation (out of diagnostic), the Configure Motor function must be executed again.

Open-Loop Diagnostic (Located in Motor 1)

The Open-Loop Diagnostic is used to run the controller in an open-loop mode. This is suitable for running an induction motor, or helping to diagnose startup problems with PM motors. It is not recommended to run PM motors for extended periods in this mode as the motor may become demagnetized.

Only a single parameter needs to be modified to use the Open-Loop diagnostic, which is VFGain. This value is used to generate the Volts per Hertz control gain value. Typically a value of 20 can be used to start testing and can then be increased to the desired level. More detail can be found about VFGain in the IRMCF343 User’s Guide.