International
IOR Rectifier

Data Sheet No. PD60304A

IRMCF341

Sensorless Motor Control IC for Appliances

Features

- **MCE™ (Motion Control Engine) - Hardware based computation engine for high efficiency sinusoidal sensorless control of permanent magnet AC motor**
- **Supports both interior and surface permanent magnet motors**
- **Built-in hardware peripheral for single shunt current feedback reconstruction**
- **No external current or voltage sensing operational amplifier required**
- **Three/two-phase Space Vector PWM**
- **Three-channel analog output (PWM)**
- **Embedded 8-bit high speed microcontroller (8051) for flexible I/O and man-machine control**
- **JTAG programming port for emulation/debugger**
- **Serial communication interface (UART)**
- **I^2C/SPI serial interface**
- **Watchdog timer with independent analog clock**
- **Three general purpose timers/counters**
- **Two special timers: periodic timer, capture timer**
- **External EEPROM and internal RAM facilitate debugging and code development**
- **Pin compatible with IRMCK341, OTP-ROM version**
- **1.8V/3.3V CMOS**

Product Summary

Maximum crystal frequency	60 MHz
Maximum internal clock (SYSCLK) frequency	128 MHz
Sensorless control computation time	11 µsec typ
MCE™ computation data range	16 bit signed
Program RAM loaded from external EEPROM	48K bytes
Data RAM	8K bytes
GateKill latency (digital filtered)	2 µsec
PWM carrier frequency counter	16 bits/ SYSCLK
A/D input channels	8
A/D converter resolution	12 bits
A/D converter conversion speed	2 µsec
8051 instruction execution speed	2 SYSCLK
Analog output (PWM) resolution	8 bits
UART baud rate (typ)	57.6K bps
Number of I/O (max)	24
Package (lead-free)	QFP64

Description

IRMCF341 is a high performance RAM based motion control IC designed primarily for appliance applications. IRMCF341 is designed to achieve low cost and high performance control solutions for advanced inverterized appliance motor control. IRMCF341 contains two computation engines. One is Motion Control Engine (MCE™) for sensorless control of permanent magnet motors; the other is an 8-bit high-speed microcontroller (8051). Both computation engines are integrated into one monolithic chip. The MCE™ contains a collection of control elements such as Proportional plus Integral, Vector rotator, Angle estimator, Multiply/Divide, Low loss SVPWM, Single Shunt IFB. The user can program a motion control algorithm by connecting these control elements using a graphic compiler. Key components of the sensorless control algorithms, such as the Angle Estimator, are provided as complete pre-defined control blocks implemented in hardware. A unique analog/digital circuit and algorithm to fully support single shunt current reconstruction is also provided. The 8051 microcontroller performs 2-cycle instruction execution (60MIPS at 120MHz). The MCE and 8051 microcontroller are connected via dual port RAM to process signal monitoring and command input. An advanced graphic compiler for the MCE™ is seamlessly integrated into the MATLAB/Simulink environment, while third party JTAG based emulator tools are supported for 8051 developments. IRMCF341 comes with a small QFP64 pin lead-free package.

TABLE OF CONTENTS

1 Overview 4
2 IRMCF341 Block Diagram and Main Functions 5
3 Pinout 7
4 Input/Output of IRMCF341 8
4.1 8051 Peripheral Interface Group 8
4.2 Motion Peripheral Interface Group 10
4.3 Analog Interface Group 10
4.4 Power Interface Group 11
4.5 Test Interface Group 11
5 Application Connections 12
6 DC Characteristics 13
6.1 Absolute Maximum Ratings 13
6.2 System Clock Frequency and Power Consumption 13
6.3 Digital I/O DC Characteristics 14
6.4 PLL and Oscillator DC characteristics 15
6.5 Analog I/O DC Characteristics 15
6.6 Under Voltage Lockout DC characteristics 16
6.7 CMEXT and AREF Characteristics 16
7 AC Characteristics 17
7.1 PLL AC Characteristics 17
7.2 Analog to Digital Converter AC Characteristics 18
7.3 Op amp AC Characteristics 19
7.4 SYNC to SVPWM and A/D Conversion AC Timing 20
7.5 GATEKILL to SVPWM AC Timing 21
7.6 Interrupt AC Timing 21
7.7 I^2C AC Timing 22
7.8 SPI AC Timing 23
7.8.1 SPI Write AC timing 23
7.8.2 SPI Read AC Timing 24
7.9 UART AC Timing 25
7.10 CAPTURE Input AC Timing 26
7.11 JTAG AC Timing 27
8 Pin List 28
9 Package Dimensions 31
10 Part Marking Information 32

TABLE OF FIGURES

Figure 1. Typical Application Block Diagram Using IRMCF341 4
Figure 2. IRMCF341 Internal Block Diagram 5
Figure 3. IRMCF341 Pin Configuration 7
Figure 4. Input/Output of IRMCF341 8
Figure 5. Application Connection of IRMCF341 12
Figure 6. Clock Frequency vs. Power Consumption 13

TABLE OF TABLES

Table 1. Absolute Maximum Ratings 13
Table 2. System Clock Frequency 13
Table 3. Digital I/O DC Characteristics 14
Table 4. PLL DC Characteristics 15
Table 5. Analog I/O DC Characteristics 15
Table 6. UVcc DC Characteristics 16
Table 7. CMEXT and AREF DC Characteristics 16
Table 8. PLL AC Characteristics 17
Table 9. A/D Converter AC Characteristics 18
Table 10. Current Sensing OP Amp AC Characteristics 19
Table 11. SYNC AC Characteristics 20
Table 12. GATEKILL to SVPWM AC Timing 21
Table 13. Interrupt AC Timing 21
Table 14. I^2C AC Timing 22
Table 15. SPI Write AC Timing 23
Table 16. SPI Read AC Timing 24
Table 17. UART AC Timing 25
Table 18. CAPTURE AC Timing 26
Table 19. JTAG AC Timing 27
Table 20. Pin List 30

1 Overview

IRMCF341 is a new International Rectifier integrated circuit device primarily designed as a one-chip solution for complete inverter controlled appliance motor control applications. Unlike a traditional microcontroller or DSP, the IRMCF341 provides a built-in closed loop sensorless control algorithm using the unique Motion Control Engine (MCE™) for permanent magnet motors. The MCE™ consists of a collection of control elements, motion peripherals, a dedicated motion control sequencer and dual port RAM to map internal signal nodes. IRMCF341 also employs a unique single shunt current reconstruction circuit to eliminate additional analog/digital circuitry and enables a direct shunt resistor interface to the IC. Motion control programming is achieved using a dedicated graphical compiler integrated into the MATLAB/Simulink™ development environment. Sequencing, user interface, host communication, and upper layer control tasks can be implemented in the 8051 high-speed 8-bit microcontroller. The 8051 microcontroller is equipped with a JTAG port to facilitate emulation and debugging tools. Figure 1 shows a typical application schematic using the IRMCF341.

IRMCF341 is intended for development purpose and contains 48K bytes of RAM, which can be loaded from external EEPROM for 8051 program execution. For high volume production, IRMCK341 contains OTP ROM in place of program RAM to reduce the cost. Both IRMCF341 and IRMCK341 come in the same 64-pin QFP package with identical pin configuration to facilitate PC board layout and transition to mass production

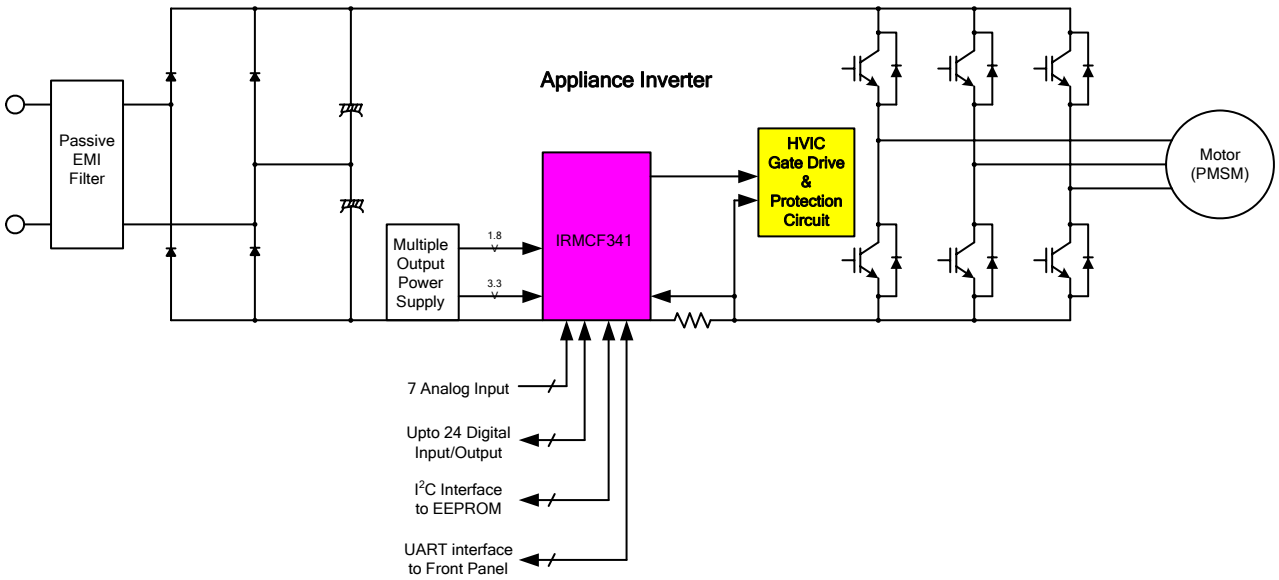

Figure 1. Typical Application Block Diagram Using IRMCF341

2 IRMCF341 Block Diagram and Main Functions

IRMCF341 block diagram is shown in Figure 2.

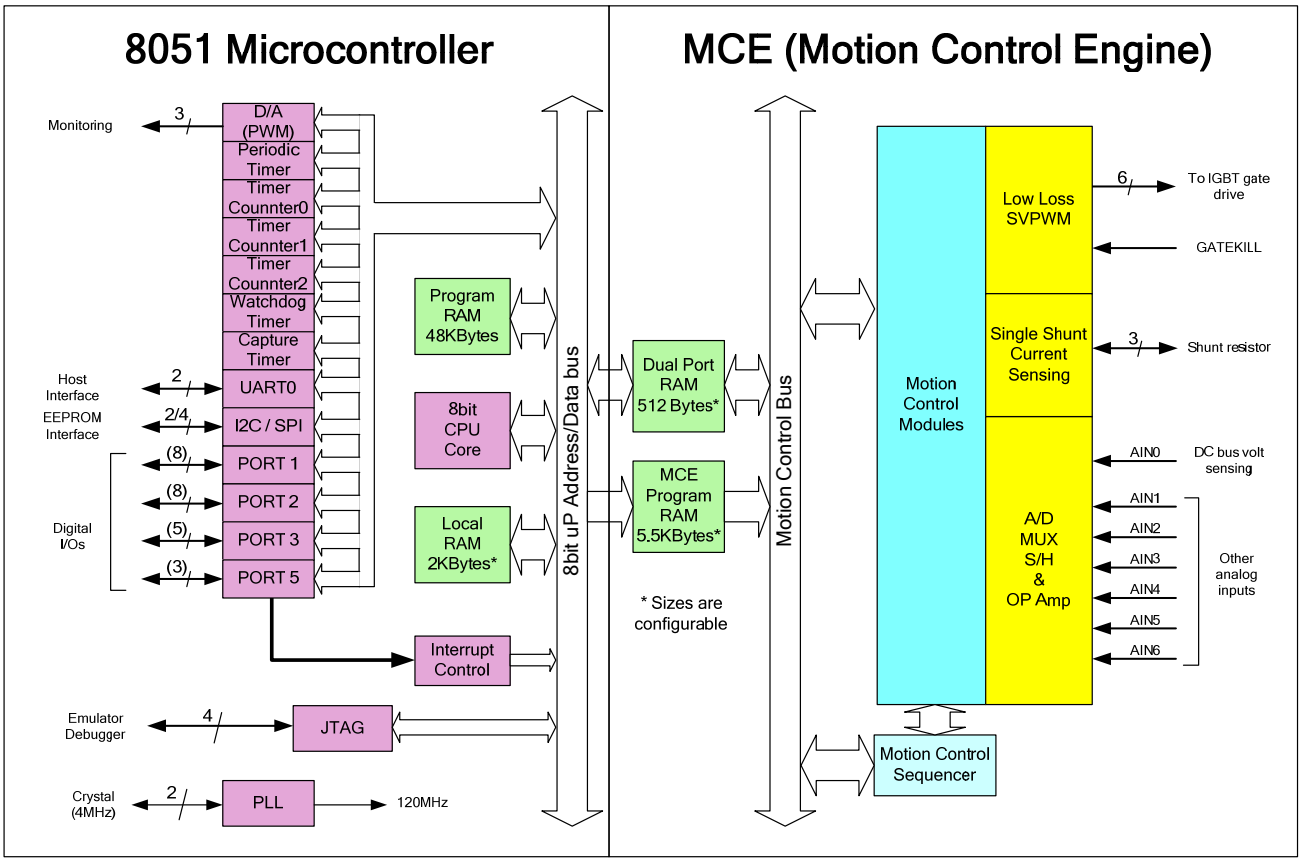

Figure 2. IRMCF341 Internal Block Diagram

IRMCF341 contains the following functions for sensorless AC motor control applications:

- Motion Control Engine (MCE™)
  - Proportional plus Integral block
  - Low pass filter
  - Differentiator and lag (high pass filter)
  - Ramp
  - Limit
  - Angle estimate (sensorless control)
  - Inverse Clark transformation
  - Vector rotator

- Bit latch
- Peak detect
- Transition
- Multiply-divide (signed and unsigned)
- Divide (signed and unsigned)
- Adder
- Subtractor
- Comparator
- Counter
- Accumulator
- Switch
- Shift
- ATAN (arc tangent)
- Function block (any curve fitting, nonlinear function)
- 16-bit wide Logic operations (AND, OR, XOR, NOT, NEGATE)
- MCE™ program and data memory (6K byte). Note 1
- MCE™ control sequencer

- 8051 microcontroller
  - Three 16-bit timer/counters
  - 16-bit periodic timer
  - 16-bit analog watchdog timer
  - 16-bit capture timer
  - Up to 24 discrete I/Os
  - Eight-channel 12-bit A/D
    - One buffered channel for current sensing (0 – 1.2V input)
    - Seven unbuffered channels (0 – 1.2V input)
  - JTAG port (4 pins)
  - Up to three channels of analog output (8-bit PWM)
  - UART
  - I^2C/SPI port
  - 48K byte program RAM loaded from external EEPROM
  - 2K byte data RAM. Note 1

Note 1: Total size of RAM is 8K byte including MCE program, MCE data, and 8051 data. Different sizes can be allocated depending on applications.

3 Pinout

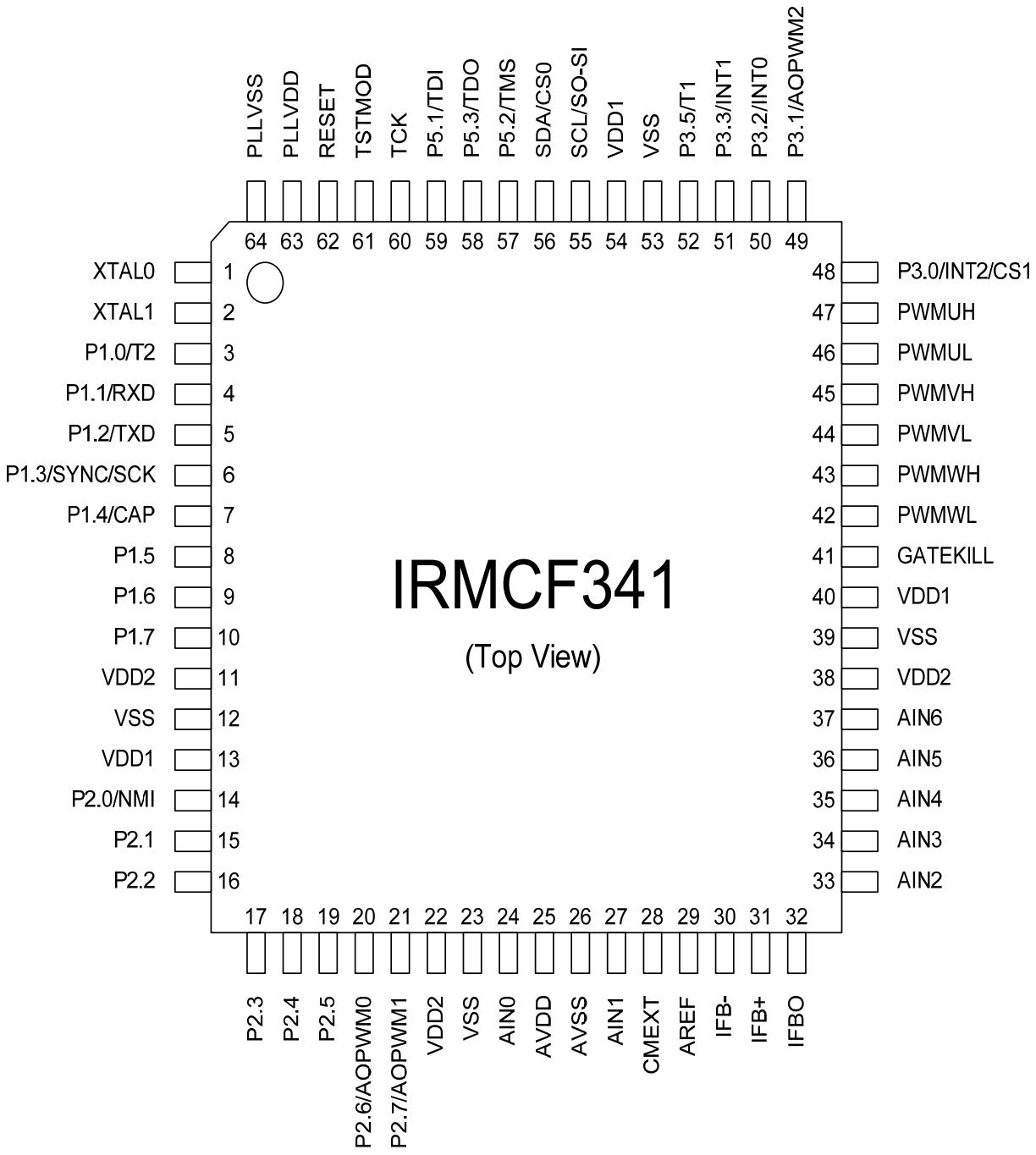

Figure 3. IRMCF341 Pin Configuration

4 Input/Output of IRMCF341

All I/O signals of IRMCF341 are shown in Figure 4. All I/O pins are 3.3V logic interface except A/D interface pins.

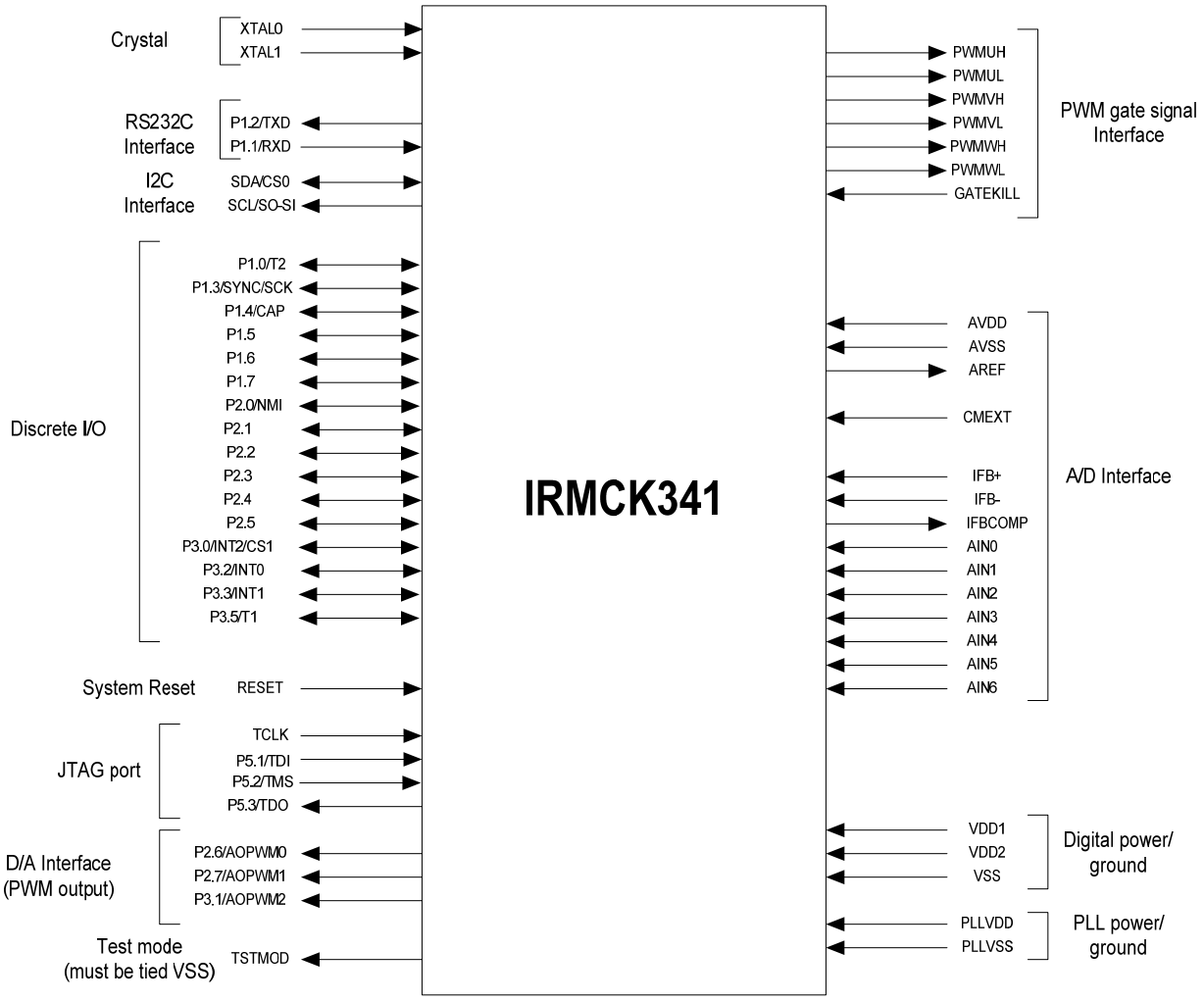

Figure 4. Input/Output of IRMCF341

4.1 8051 Peripheral Interface Group

UART Interface

TXD	Output, Transmit data from IRMCF341
RXD	Input, Receive data to IRMCF341

Discrete I/O Interface

P1.0/T2	Input/output port 1.0, can be configured as Timer/Counter 2 input
P1.1/RXD	Input/output port 1.1, can be configured as RXD input
P1.2/TXD	Input/output port 1.2, can be configured as TXD output
P1.3/SYNC/SCK	Input/output port 1.3, can be configured as SYNC output or SPI clock output, needs to be pulled up to VDD1 in order to boot from I^2C EEPROM
P1.4/CAP	Input/output port 1.4, can be configured as Capture Timer input
P1.5	Input/output port 1.5
P1.6	Input/output port 1.6
P1.7	Input/output port 1.7
P2.0/NMI	Input/output port 2.0, can be configured as non-maskable interrupt input
P2.1	Input/output port 2.1
P2.2	Input/output port 2.2
P2.3	Input/output port 2.3
P2.4	Input/output port 2.4
P2.5	Input/output port 2.5
P2.6/AOPWM0	Input/output port 2.6, can be configured as AOPWM0 output
P2.7/AOPWM1	Input/output port 2.7, can be configured as AOPWM1 output
P3.0/INT2/CS1	Input/output port 3.0, can be configured as INT2 input or SPI chip select 1
P3.1/AOPWM2	Input/output port 3.1, can be configured as AOPWM2 output
P3.2/NINT0	Input/output port 3.2, can be configured as INT0 input
P3.3/NINT1	Input/output port 3.3, can be configured as INT1 input
P3.5/T1	Input/output port 3.5, can be configured as Timer/Counter 1 input
P5.2/TSM	Input/output port 5.2, configured as JTAG port by default
P5.3/TDO	Input/output port 5.3, configured as JTAG port by default
P5.1/TDI	Input/output port 5.1, configured as JTAG port by default

Analog Output Interface

P2.6/AOPWM0	Input/output, can be configured as 8-bit PWM output 0 with programmable carrier frequency
P2.7/AOPWM1	Input/output, can be configured as 8-bit PWM output 1 with programmable carrier frequency
P3.1/AOPWM2	Input/output, can be configured as 8-bit PWM output 2 with programmable carrier frequency

Crystal Interface

XTAL0	Input, connected to crystal
XTAL1	Output, connected to crystal

Reset Interface

RESET	Inout, system reset, needs to be pulled up to VDD1 but doesn't require external RC time constant

I^2C Interface

SCL/SO-SI	Output, I^2C clock output, or SPI data
SDA/CS0	Input/output, I^2C Data line or SPI chip select 0

I^2C/SPI Interface

SCL/SO-SI	Output, I^2C clock output, or SPI data
SDA/CS0	Input/output, I^2C data line or SPI chip select 0
P1.3/SYNC/SCK	Input/output port 1.3, can be configured as SYNC output or SPI clock output, needs to be pulled up to VDD1 in order to boot from I^2C EEPROM
P3.0/INT2/CS1	Input/output port 3.0, can be configured as INT2 input or SPI chip select 1

4.2 Motion Peripheral Interface Group

PWM

PWMUH	Output, PWM phase U high side gate signal
PWMUL	Output, PWM phase U low side gate signal
PWMVH	Output, PWM phase V high side gate signal
PWMVL	Output, PWM phase V low side gate signal
PWMWH	Output, PWM phase W high side gate signal
PWMWL	Output, PWM phase W low side gate signal

Fault

GATEKILL	Input, upon assertion, this negates all six PWM signals, programmable logic sense

4.3 Analog Interface Group

AVDD	Analog power (1.8V)
AVSS	Analog power return
AREF	0.6V buffered output
CMEXT	Unbuffered 0.6V, input to the AREF buffer, capacitor needs to be connected.
IFB+	Input, Operational amplifier positive input for shunt resistor current sensing
IFB-	Input, Operational amplifier negative input for shunt resistor current sensing
IFBO	Output, Operational amplifier output for shunt resistor current sensing
AIN0	Input, Analog input channel 0 (0 – 1.2V), typically configured for DC bus voltage input

AIN1	Input, Analog input channel 1 (0 – 1.2V), needs to be pulled down to AVSS if unused
AIN2	Input, Analog input channel 2 (0 – 1.2V), needs to be pulled down to AVSS if unused
AIN3	Input, Analog input channel 3 (0 – 1.2V), needs to be pulled down to AVSS if unused
AIN4	Input, Analog input channel 4 (0 – 1.2V), needs to be pulled down to AVSS if unused
AIN5	Input, Analog input channel 5 (0 – 1.2V), needs to be pulled down to AVSS if unused
AIN6	Input, Analog input channel 6 (0 – 1.2V), needs to be pulled down to AVSS if unused

4.4 Power Interface Group

VDD1	Digital power for I/O (3.3V)
VDD2	Digital power for core logic (1.8V)
VSS	Digital common
PLLVDD	PLL power (1.8V)
PLLVSS	PLL ground return

4.5 Test Interface Group

TSTMOD	Must be tied to VSS, used only for factory testing.
P5.2/TSM	Input/output port 5.2, configured as JTAG port by default
P5.3/TDO	Input/output port 5.3, configured as JTAG port by default
P5.1/TDI	Input/output port 5.1, configured as JTAG port by default
TCK	Input, JTAG test clock

5 Application Connections

Typical application connection is shown in Figure 5. All components necessary to implement a complete sensorless drive control algorithm are shown connected to IRMCF341.

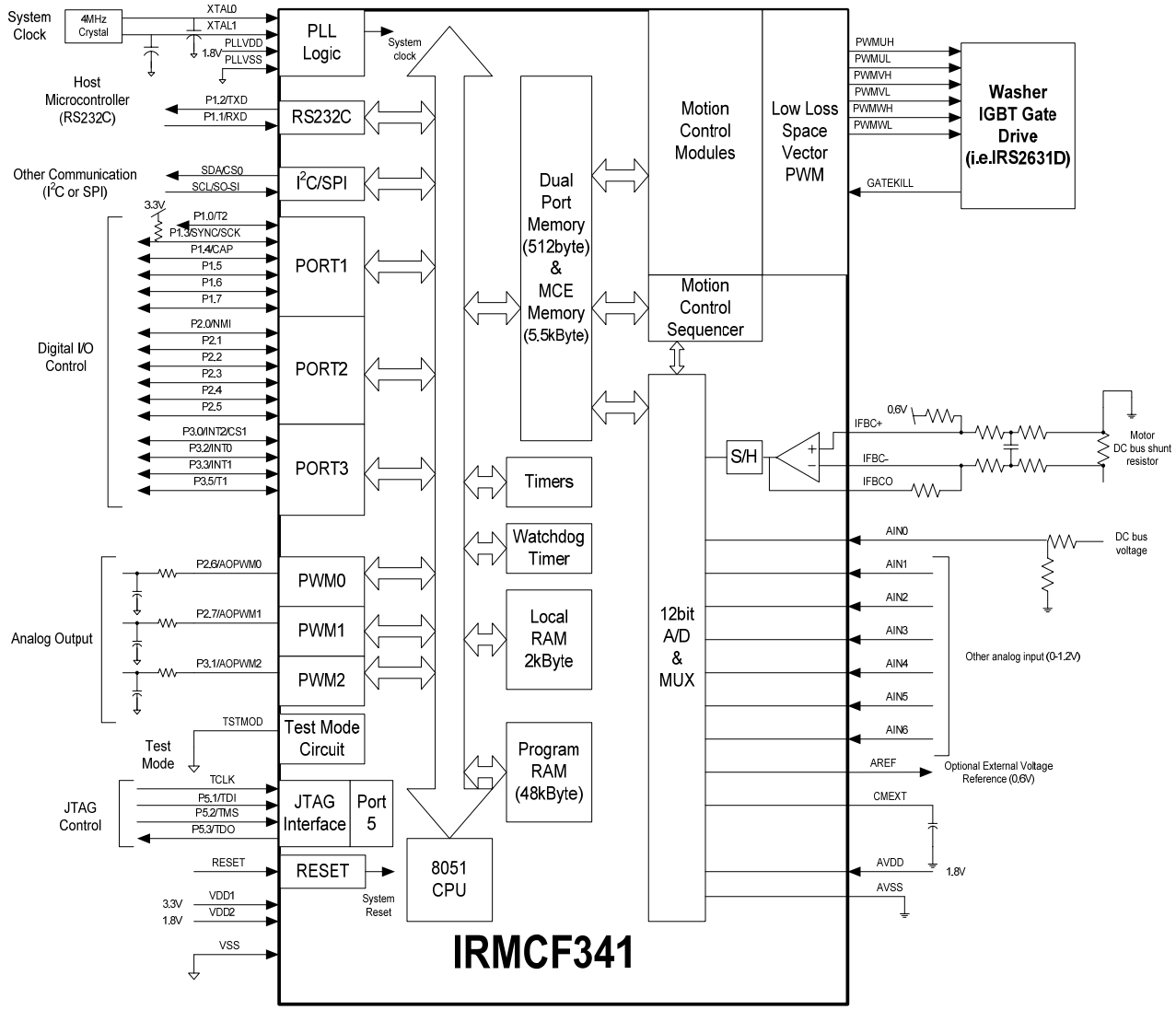

Figure 5. Application Connection of IRMCF341

6 DC Characteristics

6.1 Absolute Maximum Ratings

Symbol	Parameter	Min	Typ	Max	Condition
V_{DD1}	Supply Voltage	-0.3 V	-	3.6 V	Respect to VSS
V_{DD2}	Supply Voltage	-0.3 V	-	1.98 V	Respect to VSS
V_{IA}	Analog Input Voltage	-0.3 V	-	1.98 V	Respect to AVSS
V_{ID}	Digital Input Voltage	-0.3 V	-	3.65 V	Respect to VSS
T_A	Ambient Temperature	-40 ˚C	-	85 ˚C	
T_S	Storage Temperature	-65 ˚C	-	150 ˚C	

Table 1. Absolute Maximum Ratings

Caution: Stresses beyond those listed in "Absolute Maximum Ratings" may cause permanent damage to the device. These are stress ratings only and function of the device at these or any other conditions beyond those indicated in the operational sections of the specifications are not implied.

6.2 System Clock Frequency and Power Consumption

Symbol	Parameter	Min	Typ	Max	Unit
SYSCLK	System Clock	32	-	128	**MHz**

Table 2. System Clock Frequency

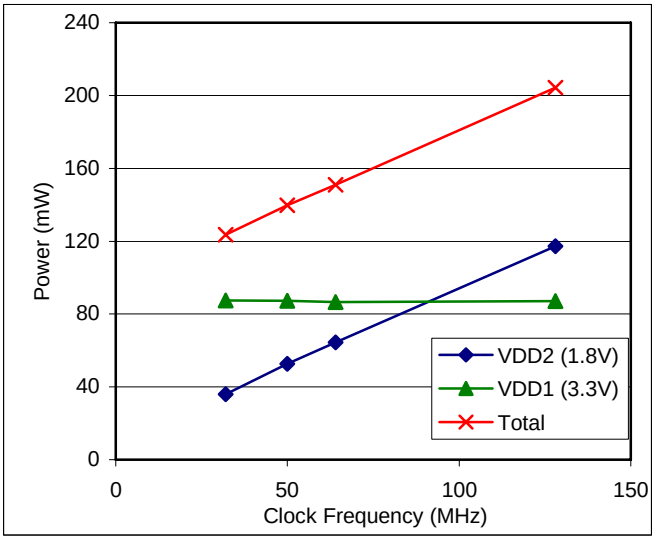

Figure 6. Clock Frequency vs. Power Consumption

6.3 Digital I/O DC Characteristics

Symbol	Parameter	Min	Typ	Max	Condition
V_{DD1}	Supply Voltage	3.0 V	3.3 V	3.6 V	Recommended
V_{DD2}	Supply Voltage	1.62 V	1.8 V	1.98 V	Recommended
V_{IL}	Input Low Voltage	-0.3 V	-	0.8 V	Recommended
V_{IH}	Input High Voltage	2.0 V		3.6 V	Recommended
C_{IN}	Input capacitance	-	3.6 pF	-	(1)
I_L	Input leakage current		±10 nA	±1 µA	V_O = 3.3 V or 0 V
I_{OL1} (2)	Low level output current	8.9 mA	13.2 mA	15.2 mA	V_{OL} = 0.4 V (1)
I_{OH1} (2)	High level output current	12.4 mA	24.8 mA	38 mA	V_{OH} = 2.4 V (1)
I_{OL2} (3)	Low level output current	17.9 mA	26.3 mA	33.4 mA	V_{OL} = 0.4 V (1)
I_{OH2} (3)	High level output current	24.6 mA	49.5 mA	81 mA	V_{OH} = 2.4 V (1)

Table 3. Digital I/O DC Characteristics

Note:
(1) Data guaranteed by design.
(2) Applied to SCL/SO-SI, SDA/CS0 pins.
(3) Applied to P1.0/T2, P1.1/RXD, P1.2/TXD, P1.3/SYNC/SCK, P1.4/CAP, P1.5, P1.6, P1.7, P2.0/NMI, P2.1, P2.2, P2.3, P2.4, P2.5, P2.6/AOPWM0, P2.7/AOPWM1, P3.0/INT2/CS1, P3.1/AOPWM2, P3.2/INT0, P3.3/INT1, P3.5/T1, P3.6/RXD1, P3.7/TXD1, P5.2/TMS, P5.3/TDO, P5.1/TDI, GATEKILL, PWMUL, PWMUH, PWMVL, PWMVH, PWMWL, and PWMWH pins.

6.4 PLL and Oscillator DC characteristics

Symbol	Parameter	Min	Typ	Max	Condition
V_{PLLVDD}	Supply Voltage	1.62 V	1.8 V	1.92 V	Recommended
$V_{IL\ OSC}$	Oscillator Input Low Voltage	V_{PLLVSS}	-	0.2* V_{PLLVDD}	V_{PLLVDD} = 1.8 V (1)
$V_{IH\ OSC}$	Oscillator Input High Voltage	0.8* V_{PLLVDD}		V_{PLLVDD}	V_{PLLVDD} = 1.8 V (1)

Table 4. PLL DC Characteristics

Note:
(1) Data guaranteed by design.

6.5 Analog I/O DC Characteristics

- OP amp for current sensing (IFB+, IFB-, IFBO)

C_{AREF} = 1nF, C_{MEXT}= 100nF. Unless specified, Ta = 25˚C.

Symbol	Parameter	Min	Typ	Max	Condition
V_{AVDD}	Supply Voltage	1.71 V	1.8 V	1.89 V	Recommended
V_{OFFSET}	Input Offset Voltage	-	-	26 mV	V_{AVDD} = 1.8 V
V_I	Input Voltage Range	0 V		1.2 V	Recommended
V_{OUTSW}	OP amp output operating range	50 mV (1)	-	1.2 V	V_{AVDD} = 1.8 V
C_{IN}	Input capacitance	-	3.6 pF	-	(1)
R_{FDBK}	OP amp feedback resistor	5 kΩ	-	20 kΩ	Requested between IFBO and IFB-
OP_{GAINCL}	Operating Close loop Gain	80 db	-	-	(1)
CMRR	Common Mode Rejection Ratio	-	80 db	-	(1)
I_{SRC}	Op amp output source current	-	1 mA	-	V_{OUT} = 0.6 V (1)
I_{SNK}	Op amp output sink current	-	100 µA	-	V_{OUT} = 0.6 V (1)

Table 5. Analog I/O DC Characteristics

Note:
(1) Data guaranteed by design.

6.6 Under Voltage Lockout DC characteristics

- Based on AVDD (1.8V)

Unless specified, Ta = 25˚C.

Symbol	Parameter	Min	Typ	Max	Condition
UV_{CC+}	UVcc positive going Threshold	1.53 V	1.66 V	1.71 V	V_{DD1} = 3.3 V
UV_{CC-}	UVcc negative going Threshold	1.52 V	1.62 V	1.71 V	V_{DD1} = 3.3 V
$UV_{CC}H$	UVcc Hysteresys	-	40 mV	-	

Table 6. UVcc DC Characteristics

6.7 CMEXT and AREF Characteristics

C_{AREF} = 1nF, C_{MEXT}= 100nF. Unless specified, Ta = 25˚C.

Symbol	Parameter	Min	Typ	Max	Condition
V_{CM}	CMEXT voltage	495 mV	600 mV	700 mV	V_{AVDD} = 1.8 V
V_{AREF}	Buffer Output Voltage	495 mV	600 mV	700 mV	V_{AVDD} = 1.8 V
ΔV_o	Load regulation (V_{DC}-0.6)	-	1 mV	-	(1)
PSRR	Power Supply Rejection Ratio	-	75 db	-	(1)

Table 7. CMEXT and AREF DC Characteristics

7 AC Characteristics

7.1 PLL AC Characteristics

Symbol	Parameter	Min	Typ	Max	Condition
F_{CLKIN}	Crystal input frequency	3.2 MHz	4 MHz	60 MHz	(1) (see figure below)
F_{PLL}	Internal clock frequency	32 MHz	50 MHz	128 MHz	(1)
F_{LWPW}	Sleep mode output frequency	$F_{CLKIN} \div 256$	-	-	(1)
J_S	Short time jitter	-	200 psec	-	(1)
D	Duty cycle	-	50 %	-	(1)
T_{LOCK}	PLL lock time	-	-	500 µsec	(1)

Table 8. PLL AC Characteristics

Note:
(1) Data guaranteed by design.

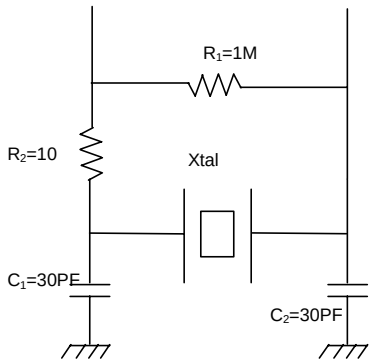

7.2 Analog to Digital Converter AC Characteristics

Unless specified, Ta = 25˚C.

Symbol	Parameter	Min	Typ	Max	Condition
T_{CONV}	Conversion time	-	-	2.05 µsec	(1)
T_{HOLD}	Sample/Hold maximum hold time	-	-	10 µsec	Voltage droop ≤ 15 LSB (see figure below)

Table 9. A/D Converter AC Characteristics

Note:
(1) Data guaranteed by design.

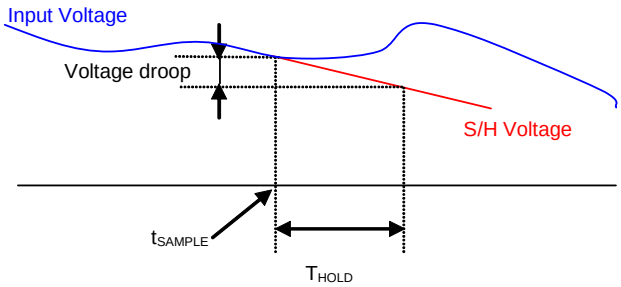

7.3 Op amp AC Characteristics

- OP amp for current sensing (IFB+, IFB-, IFBO)

Unless specified, Ta = 25˚C.

Symbol	Parameter	Min	Typ	Max	Condition
OP_{SR}	OP amp slew rate	-	10 V/µsec	-	V_{AVDD} = 1.8 V, CL = 33 pF (1)
OP_{IMP}	OP input impedance	-	10^8 Ω	-	(1)
T_{SET}	Settling time	-	400 ns	-	V_{AVDD} = 1.8 V, CL = 33 pF (1)

Table 10. Current Sensing OP Amp AC Characteristics

Note:
(1) Data guaranteed by design.

7.4 SYNC to SVPWM and A/D Conversion AC Timing

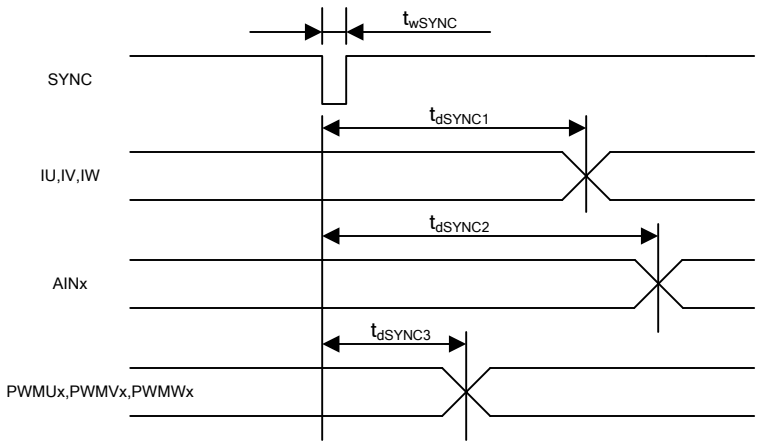

Unless specified, Ta = 25˚C.

Symbol	Parameter	Min	Typ	Max	Unit
t_{wSYNC}	SYNC pulse width	-	32	-	SYSCLK
t_{dSYNC1}	SYNC to current feedback conversion time	-	-	100	SYSCLK
t_{dSYNC2}	SYNC to AIN0-6 analog input conversion time	-	-	200	SYSCLK (1)
t_{dSYNC3}	SYNC to PWM output delay time	-	-	2	SYSCLK

Table 11. SYNC AC Characteristics

Note:
(1) AIN1 through AIN6 channels are converted once every 6 SYNC events

7.5 GATEKILL to SVPWM AC Timing

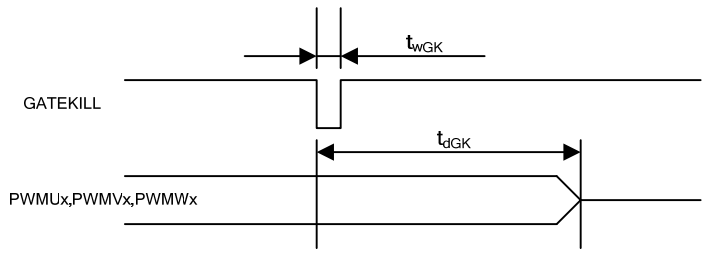

Unless specified, Ta = 25˚C.

Symbol	Parameter	Min	Typ	Max	Unit
t_{wGK}	GATEKILL pulse width	32	-	-	SYSCLK
t_{dGK}	GATEKILL to PWM output delay	-	-	100	SYSCLK

Table 12. GATEKILL to SVPWM AC Timing

7.6 Interrupt AC Timing

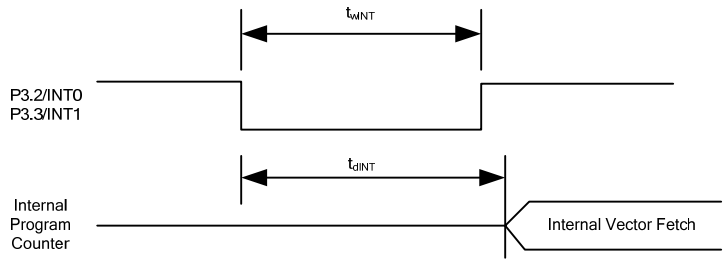

Unless specified, Ta = 25˚C.

Symbol	Parameter	Min	Typ	Max	Unit
t_{wINT}	INT0, INT1 Interrupt Assertion Time	4	-	-	SYSCLK
t_{dINT}	INT0, INT1 latency	-	-	4	SYSCLK

Table 13. Interrupt AC Timing

7.7 I²C AC Timing

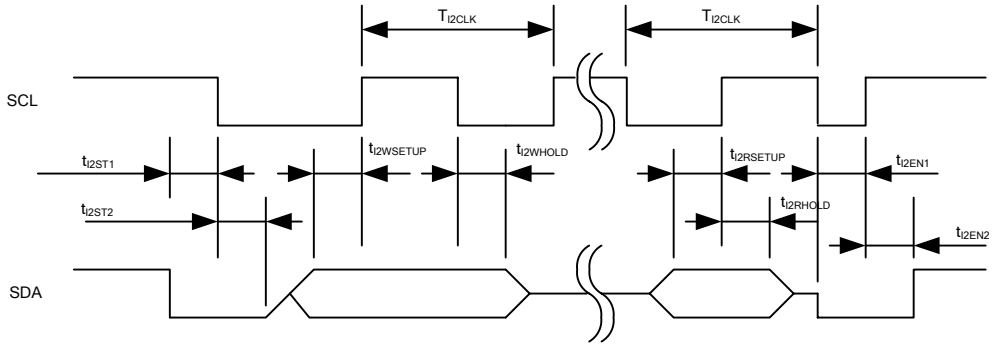

Unless specified, Ta = 25˚C.

Symbol	Parameter	Min	Typ	Max	Unit
T_{I2CLK}	I²C clock period	10	-	8192	SYSCLK
t_{I2ST1}	I²C SDA start time	0.25	-	-	T_{I2CLK}
t_{I2ST2}	I²C SCL start time	0.25	-	-	T_{I2CLK}
$t_{I2WSETUP}$	I²C write setup time	0.25	-	-	T_{I2CLK}
$t_{I2WHOLD}$	I²C write hold time	0.25	-	-	T_{I2CLK}
$t_{I2RSETUP}$	I²C read setup time	I²C filter time(1)	-	-	SYSCLK
$t_{I2RHOLD}$	I²C read hold time	1	-	-	SYSCLK

Table 14. I²C AC Timing

Note:

(1) I²C read setup time is determined by the programmable filter time applied to I²C communication.

7.8 SPI AC Timing

7.8.1 SPI Write AC timing

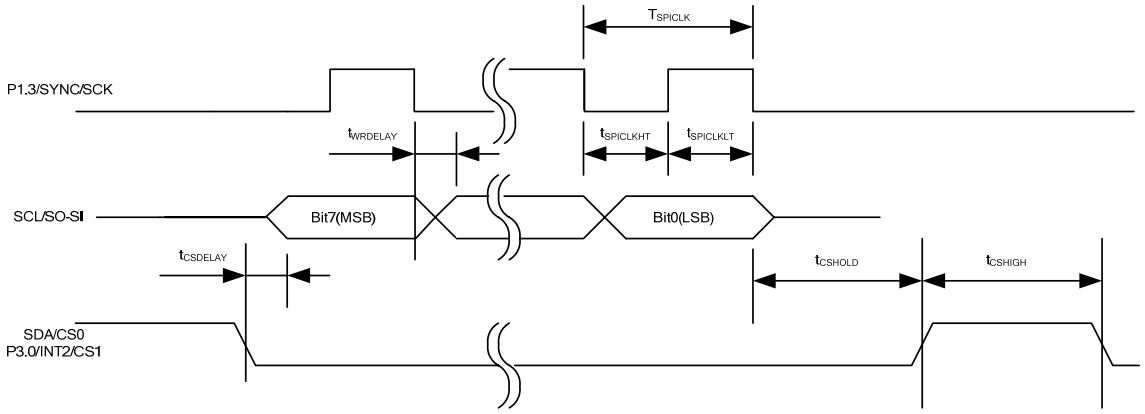

Unless specified, Ta = 25˚C.

Symbol	Parameter	Min	Typ	Max	Unit
T_{SPICLK}	SPI clock period	4	-	-	SYSCLK
$t_{SPICLKHT}$	SPI clock high time	-	1/2	-	T_{SPICLK}
$t_{SPICLKLT}$	SPI clock low time	-	1/2	-	T_{SPICLK}
$t_{CSDELAY}$	CS to data delay time	-	-	10	nsec
$t_{WRDELAY}$	CLK falling edge to data delay time	-	-	10	nsec
t_{CSHIGH}	CS high time between two consecutive byte transfer	1	-	-	T_{SPICLK}
t_{CSHOLD}	CS hold time	-	1	-	T_{SPICLK}

Table 15. SPI Write AC Timing

7.8.2 SPI Read AC Timing

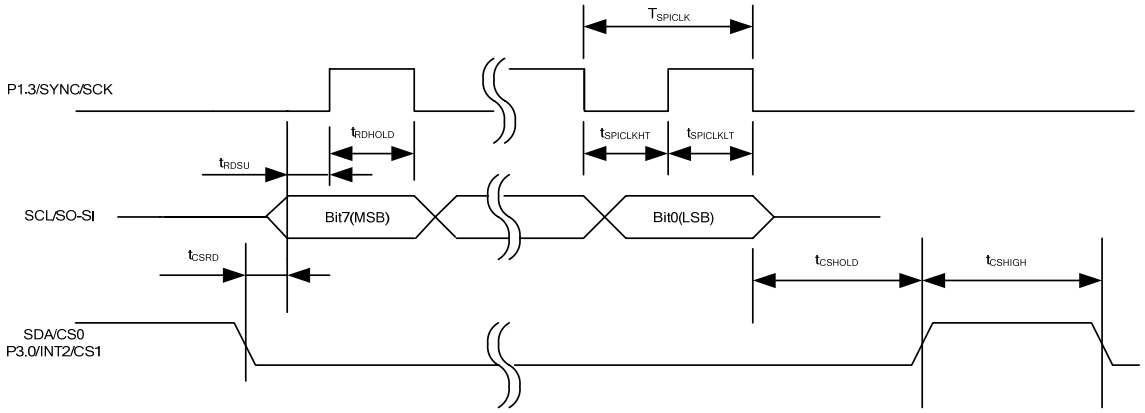

Unless specified, Ta = 25˚C.

Symbol	Parameter	Min	Typ	Max	Unit
T_{SPICLK}	SPI clock period	4	-	-	SYSCLK
$t_{SPICLKHT}$	SPI clock high time	-	1/2	-	T_{SPICLK}
$t_{SPICLKLT}$	SPI clock low time	-	1/2	-	T_{SPICLK}
t_{CSRD}	CS to data delay time	-	-	10	nsec
t_{RDSU}	SPI read data setup time	10	-	-	nsec
t_{RDHOLD}	SPI read data hold time	10	-	-	nsec
t_{CSHIGH}	CS high time between two consecutive byte transfer	1	-	-	T_{SPICLK}
t_{CSHOLD}	CS hold time	-	1	-	T_{SPICLK}

Table 16. SPI Read AC Timing

7.9 UART AC Timing

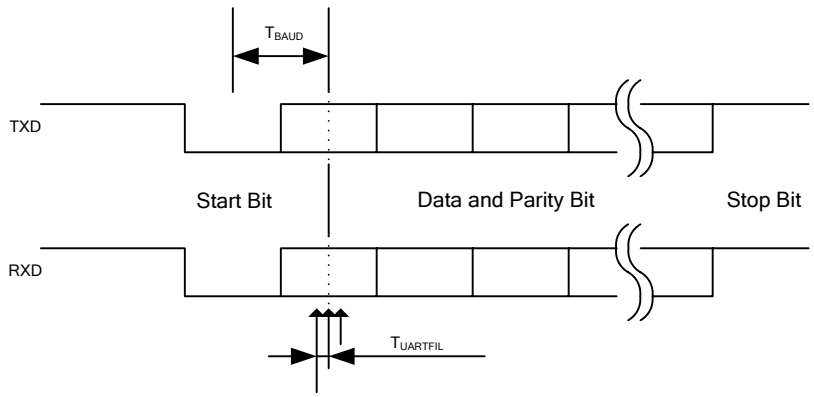

Unless specified, Ta = 25˚C.

Symbol	Parameter	Min	Typ	Max	Unit
T_{BAUD}	Baud Rate Period	-	57600	-	bit/sec
$T_{UARTFIL}$	UART sampling filter period (1)	-	1/16	-	T_{BAUD}

Table 17. UART AC Timing

Note:

(1) Each bit including start and stop bit is sampled three times at center of a bit at an interval of 1/16 T_{BAUD}. If three sampled values do not agree, then UART noise error is generated.

7.10 CAPTURE Input AC Timing

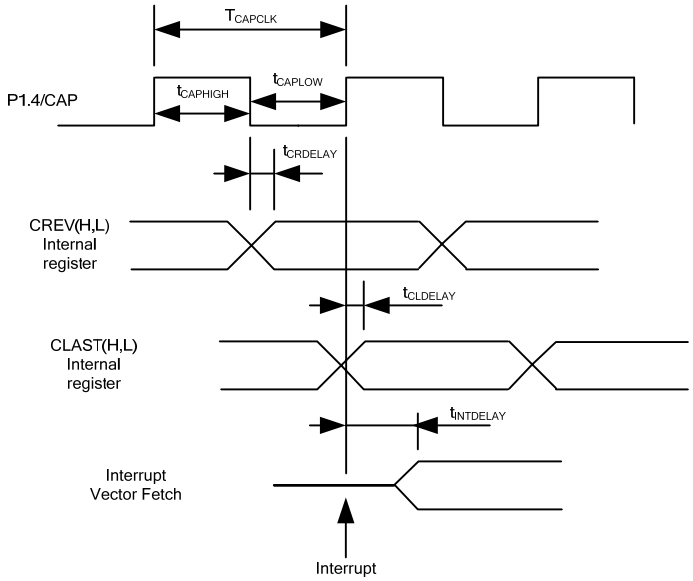

Unless specified, Ta = 25˚C.

Symbol	Parameter	Min	Typ	Max	Unit
T_{CAPCLK}	CAPTURE input period	8	-	-	SYSCLK
$t_{CAPHIGH}$	CAPTURE input high time	4	-	-	SYSCLK
t_{CAPLOW}	CAPTURE input low time	4	-	-	SYSCLK
$t_{CRDELAY}$	CAPTURE falling edge to capture register latch time	-	-	4	SYSCLK
$t_{CLDELAY}$	CAPTURE rising edge to capture register latch time	-	-	4	SYSCLK
$t_{INTDELAY}$	CAPTURE input interrupt latency time	-	-	4	SYSCLK

Table 18. CAPTURE AC Timing

7.11 JTAG AC Timing

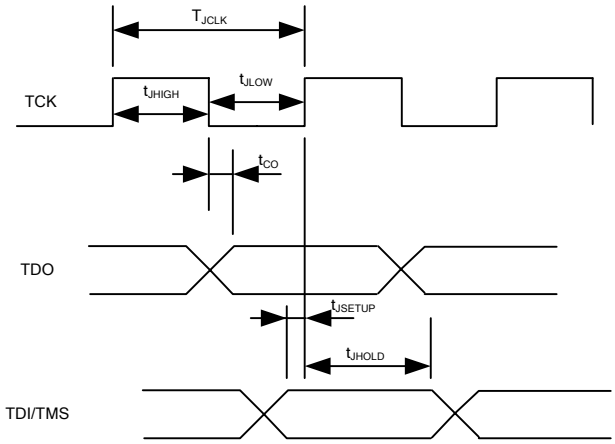

Unless specified, Ta = 25˚C.

Symbol	Parameter	Min	Typ	Max	Unit
T_{JCLK}	TCK Period	-	-	50	MHz
t_{JHIGH}	TCK High Period	10	-	-	nsec
t_{JLOW}	TCK Low Period	10	-	-	nsec
t_{CO}	TCK to TDO propagation delay time	0	-	5	nsec
t_{JSETUP}	TDI/TMS setup time	4	-	-	nsec
t_{JHOLD}	TDI/TMS hold time	0	-	-	nsec

Table 19. JTAG AC Timing

8 Pin List

Pin Number	Pin Name	Internal Pull-up /Pull-down	Pin Type	Description
1	XTAL0		I	Crystal input
2	XTAL1		O	Crystal output
3	P1.0/T2		I/O	Discrete programmable I/O or Timer/Counter 2 input
4	P1.1/RXD		I/O	Discrete programmable I/O or UART receive input
5	P1.2/TXD		I/O	Discrete programmable I/O or UART transmit output
6	P1.3/SYNC/SCK		I/O	Discrete programmable I/O or SYNC output or SPI clock output, needs to be pulled up to VDD1 in order to boot from I^2C EEPROM
7	P1.4/CAP		I/O	Discrete programmable I/O or Capture timer input
8	P1.5		I/O	Discrete programmable I/O
9	P1.6		I/O	Discrete programmable I/O
10	P1.7		I/O	Discrete programmable I/O
11	VDD2		P	1.8V digital power
12	VSS		P	Digital common
13	VDD1		P	3.3V digital power
14	P2.0/NMI		I/O	Discrete programmable I/O or Non-maskable Interrupt input
15	P2.1		I/O	Discrete programmable I/O
16	P2.2		I/O	Discrete programmable I/O
17	P2.3		I/O	Discrete programmable I/O
18	P2.4		I/O	Discrete programmable I/O
19	P2.5		I/O	Discrete programmable I/O
20	P2.6/AOPWM0		I/O	Discrete programmable I/O or PWM 0 digital output
21	P2.7/AOPWM1		I/O	Discrete programmable I/O or PWM 1 digital output
22	VDD2		P	1.8V digital power
23	VSS		P	Digital common
24	AIN0		I	Analog input channel 0, 0-1.2V range, needs to be pulled down to AVSS if unused
25	AVDD		P	1.8V analog power
26	AVSS		P	Analog common
27	AIN1		I	Analog input channel 1, 0-1.2V range, needs to be pulled down to AVSS if unused

Pin Number	Pin Name	Internal Pull-up /Pull-down	Pin Type	Description
28	CMEXT		O	Unbuffered 0.6V output. Capacitor needs to be connected.
29	AREF		O	Analog reference voltage output (0.6V)
30	IFB-		I	Single shunt current sensing OP amp input (-)
31	IFB+		I	Single shunt current sensing OP amp input (+)
32	IFBO		O	Single shunt current sensing OP amp output
33	AIN2		I	Analog input channel 2, 0-1.2V range, needs to be pulled down to AVSS if unused
34	AIN3		I	Analog input channel 3, 0-1.2V range, needs to be pulled down to AVSS if unused
35	AIN4		I	Analog input channel 4, 0-1.2V range, needs to be pulled down to AVSS if unused
36	AIN5		I	Analog input channel 5, 0-1.2V range, needs to be pulled down to AVSS if unused
37	AIN6		I	Analog input channel 6, 0-1.2V range, needs to be pulled down to AVSS if unused
38	VDD2		P	1.8V digital power
39	VSS		P	Digital common
40	VDD1		P	3.3V digital power
41	GATEKILL		I	PWM shutdown input, 2-µsec digital filter, configurable either high or low true.
42	PWMWL	70 kΩ Pull up	O	PWM gate drive for phase W low side, configurable either high or low true
43	PWMWH	70 kΩ Pull up	O	PWM gate drive for phase W high side, configurable either high or low true
44	PWMVL	70 kΩ Pull up	O	PWM gate drive for phase V low side, configurable either high or low true
45	PWMVH	70 kΩ Pull up	O	PWM gate drive for phase V high side, configurable either high or low true
46	PWMUL	70 kΩ Pull up	O	PWM gate drive for phase U low side, configurable either high or low true
47	PWMUH	70 kΩ Pull up	O	PWM gate drive for phase U high side, configurable either high or low true
48	P3.0/INT2/CS1		I/O	Discrete programmable I/O or external interrupt 2 input or SPI Chip Select 1
49	P3.1/AOPWM2		I/O	Discrete programmable I/O or PWM 2 digital output
50	P3.2/INT0		I/O	Discrete programmable I/O or Interrupt 0 input
51	P3.3/INT1		I/O	Discrete programmable I/O or Interrupt 1 input
52	P3.5/T1		I/O	Discrete programmable I/O or Timer/Counter 1

Pin Number	Pin Name	Internal Pull-up /Pull-down	Pin Type	Description
53	VSS		P	Digital common
54	VDD1		P	3.3V digital power
55	SCL/SO-SI		I/O	I^2C clock output (open drain, need pull up) or SPI data
56	SDA/CS0		I/O	I^2C data (open drain, need pull up) or SPI Chip Select 0
57	P5.2/TMS		I/O	JTAG test mode select
58	P5.3/TDO		I/O	JTAG test data output
59	P5.1/TDI		I/O	JTAG test data input
60	TCK		I	JTAG test clock
61	TSTMOD	58 kΩ pull down	I	Test mode. Must be tied to VSS. Factory use only
62	RESET		I/O	Reset, low true, Schmitt trigger input
63	PLLVDD		P	1.8V PLL power
64	PLLVSS		P	PLL ground

Table 20. Pin List

9 Package Dimensions

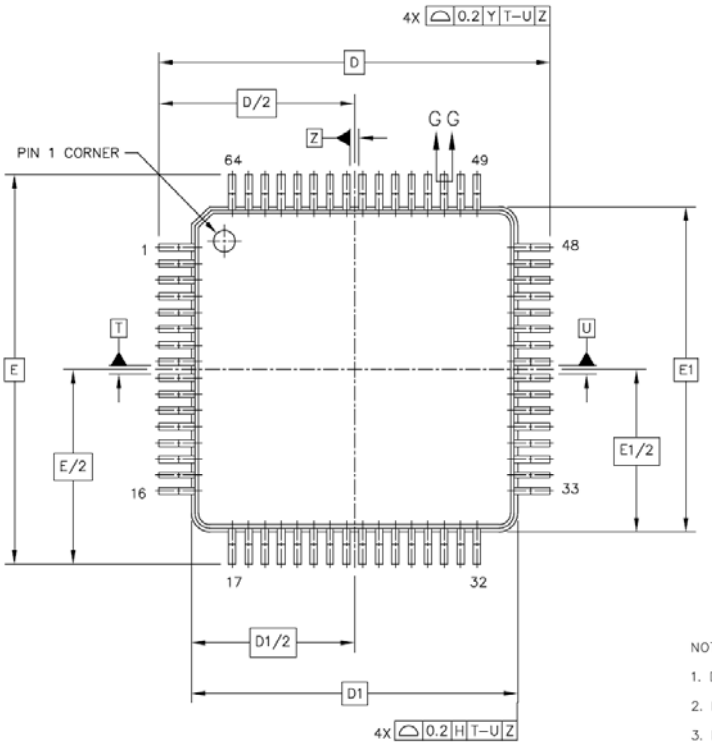

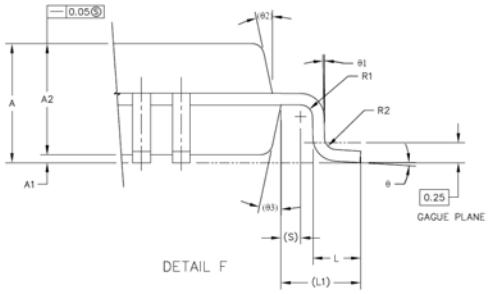

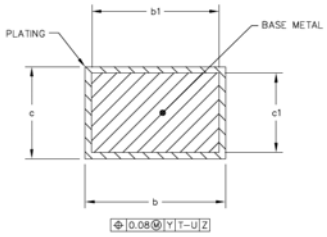

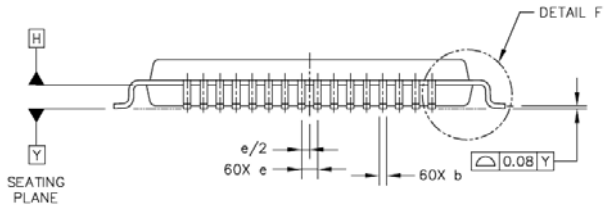

NOTES:

1. DIMENSOIONS ARE IN MILLIMETERS.
2. INTERPRET DIMENSIONS AND TOLERANCES PER ASME Y14.5M–1994.
3. DATUM PLANE DATUM H IS LOCATED AT BOTTOM OF LEAD AND IS COINCIDENT WITH THE LEAD WHERE THE LEAD EXITS THE PLASTIC BODY AT THE BOTTOM OF THE PARTING LINE.
4. DATUM T, U, AND Z TO BE DETERMINED AT DATUM PLANE H.
5. DIMENSIONS D AND E TO BE DETERMINED AT SEATING PLANE DATUM Y.
6. DIMENSIONS D1 AND E1 DO NOT INCLUDE MOLD PROTRUSION. ALLOWABLE PROTRUSION IS 0.25 PER SIDE. DIMENSIONS D1 AND E1 DO INCLUDE MOLD MISMATCH AND ARE DETERMINED AT DATUM PLANE DATUM H.
7. DIMENSION b DOES NOT INCLUDE DAMBAR PROTRUSION. DAMBAR PROTRUSION SHALL NOT CAUSE THE b DIMENSION TO EXCEED 0.35. MINIMUM SPACE BETWEEN PROTRUSION AND ADJACENT LEAD OR PROTRUSION 0.07.

DIM	MIN	MAX	DIM	MIN	MAX	DIM	MIN	MAX
A	---	1.6	L1	1 REF				
A1	0.05	0.15	R1	0.1	0.2			
A2	1.35	1.45	R2	0.1	0.2			
b	0.17	0.27	S	0.2 REF				
b1	0.17	0.23	θ	0°	7°			
c	0.09	0.2	θ1	0°	---			
c1	0.09	0.16	θ2	12° REF				
D	12 BSC		θ3	12° REF				
D1	10 BSC							
e	0.5 BSC							
E	12 BSC							
E1	10 BSC							
L	0.45	0.75						

10 Part Marking Information

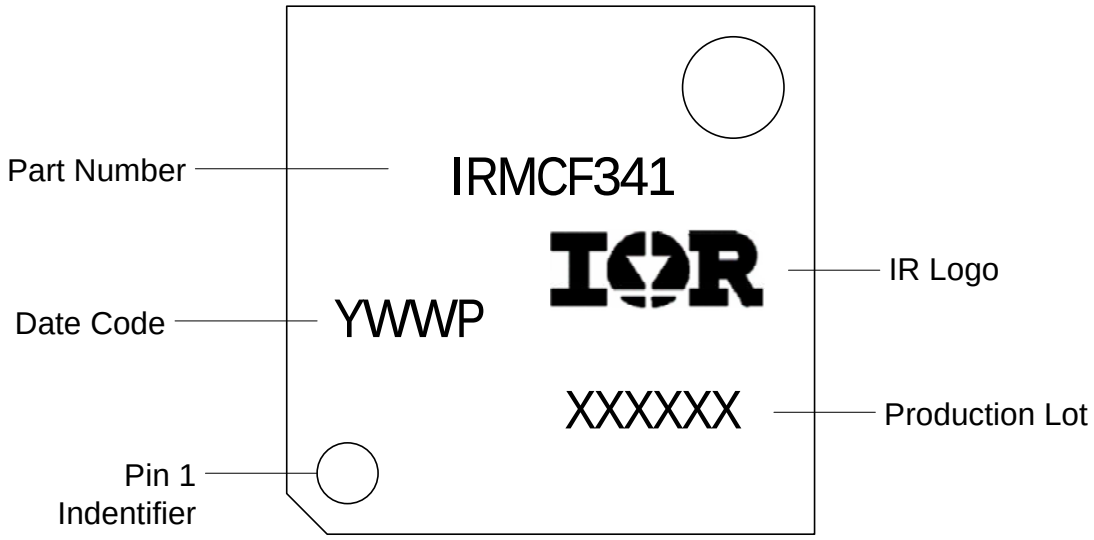

Order Information

Lead-Free Part in 64-lead QFP
Moisture sensitivity rating – MSL3

Part number	Order quantities
IRMCF341TR	1500 parts on tape and reel in dry pack
IRMCF341TY	1600 parts on trays (160 parts per tray) in dry pack

International
IOR Rectifier

The LQFP-64 is MSL3 qualified
This product has been designed and qualified for the industrial level
Qualification standards can be found at www.irf.com <http://www.irf.com>
IR WORLD HEADQUARTERS: 233 Kansas St., El Segundo, California 90245, Tel: (310) 252-7105
Data and specifications subject to change without notice. 12/05/2006