LXA15T600
Qspeed™ Family

600 V, 15 A X-Series PFC Diode

Product Summary

$I_{F(AVG)}$	15	A
V_{RRM}	600	V
Q_{RR} (Typ at 125 °C)	120	nC
I_{RRM} (Typ at 125 °C)	4.6	A
Softness t_b/t_a (Typ at 125 °C)	0.45	

Pin Assignment

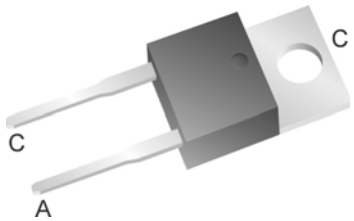

A —▶|— C

TO-220AC

RoHS Compliant

Package uses Lead-free plating and Green mold compound.
Halogen free per IEC 61249-2-21.

General Description

This device has the lowest Q_{RR} of any 600 V Silicon diode. Its recovery characteristics increase efficiency, reduce EMI and eliminate snubbers.

Applications

- Power Factor Correction (PFC) Boost Diode
- Motor drive circuits
- DC-AC Inverters

Features

- Low Q_{RR}, Low I_{RRM}, Low t_{RR}
- High dI_F/dt capable (1000 A/µs)
- Soft recovery

Benefits

- Increases efficiency
  - Eliminates need for snubber circuits
  - Reduces EMI filter component size & count
- Enables extremely fast switching

Absolute Maximum Ratings

Absolute maximum ratings are the values beyond which the device may be damaged or have its useful life impaired. Functional operation under these conditions is not implied.

Symbol	Parameter	Conditions	Rating	Units
V_{RRM}	Peak repetitive reverse voltage		600	V
$I_{F(AVG)}$	Average forward current	T_J = 150 °C, T_C = 101 °C	15	A
I_{FSM}	Non-repetitive peak surge current	60 Hz, ½ cycle	95	A
I_{FSM}	Non-repetitive peak surge current	½ cycle of t=28 µs Sinusoid, T_C=25 °C	350	A
$T_{J(MAX)}$	Maximum junction temperature		150	°C
T_{STG}	Storage temperature		–55 to 150	°C
	Lead soldering temperature	Leads at 1.6 mm from case, 10 sec	300	°C
P_D	Power dissipation	T_C = 25 °C	96	W

Thermal Resistance

Symbol	Resistance from:	Conditions	Rating	Units
$R_{\theta JA}$	Junction to ambient	TO-220	62	°C/W
$R_{\theta JC}$	Junction to case	TO-220	1.3	°C/W

Electrical Specifications at T_J= 25 °C (unless otherwise specified)

Symbol	Parameter	Conditions		Min	Typ	Max	Units
DC Characteristics							
I_R	Reverse current	V_R = 600 V, T_J = 25 °C		-	-	250	µA
		V_R = 600 V, T_J = 125 °C		-	1.7	-	mA
V_F	Forward voltage	I_F = 15 A, T_J = 25 °C		-	2.5	3.1	V
		I_F = 15 A, T_J = 150 °C		-	2.2	-	V
C_J	Junction capacitance	V_R = 10 V, 1 MHz		-	71	-	pF
Dynamic Characteristics							
t_{RR}	Reverse recovery time	dI/dt =200 A/µs V_R=400 V, I_F=15 A	T_J=25 °C	-	25	-	ns
			T_J=125 °C	-	39	-	ns
Q_{RR}	Reverse recovery charge	dI/dt =200 A/µs V_R=400 V, I_F=15 A	T_J=25 °C	-	43	67	nC
			T_J =125 °C	-	120	-	nC
I_{RRM}	Maximum reverse recovery current	dI/dt =200 A/µs V_R=400 V, I_F=15 A	T_J =25 °C	-	2.7	3.6	A
			T_J=125 °C	-	4.6	-	A
S	Softness factor = $\frac{t_b}{t_a}$	dI/dt =200 A/µs V_R=400 V, I_F=15 A	T_J =25 °C	-	0.7	-	
			T_J=125 °C	-	0.45	-	

Note to component engineers: X-Series diodes employ Schottky technologies in their design and construction. Therefore, Component Engineers should plan their test setups to be similar to those for traditional Schottky test setups. (For additional details, see Application Note AN-300.)

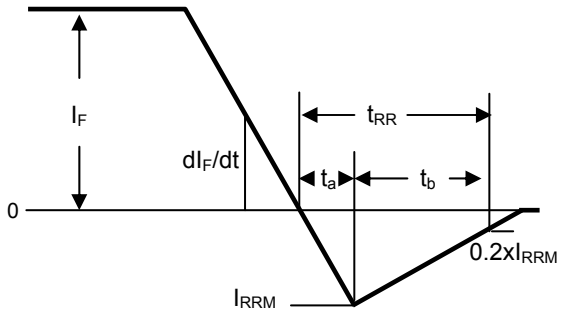

Figure 1. Reverse Recovery Definitions

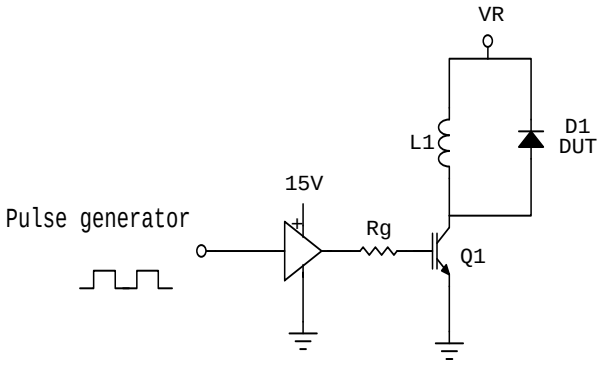

Figure 2. Reverse Recovery Test Circuit

Electrical Specifications at T_J= 25 °C (unless otherwise specified)

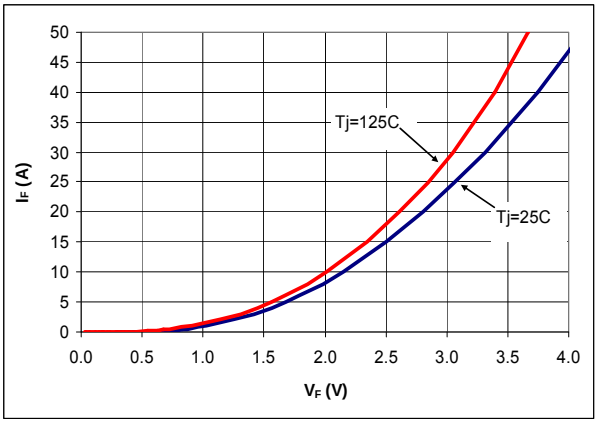

Figure 3. Typical I_F vs V_F

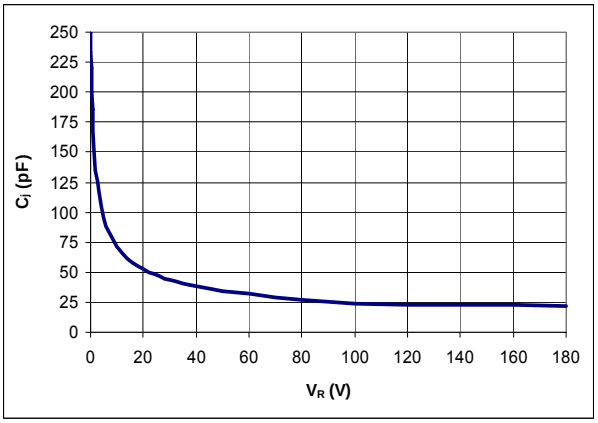

Figure 4. Typical C_j vs V_R

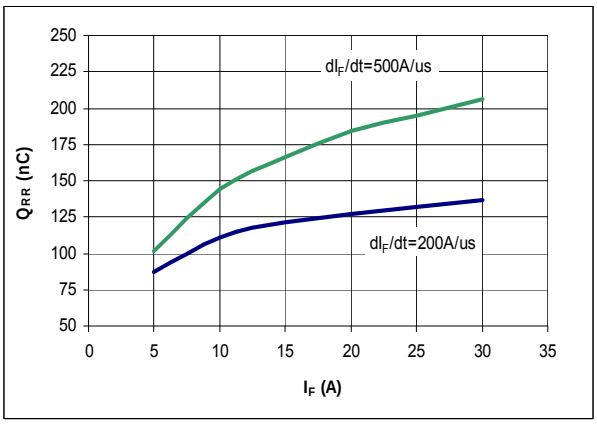

Figure 5. Typical Q_{RR} vs I_F at T_J = 125 °C

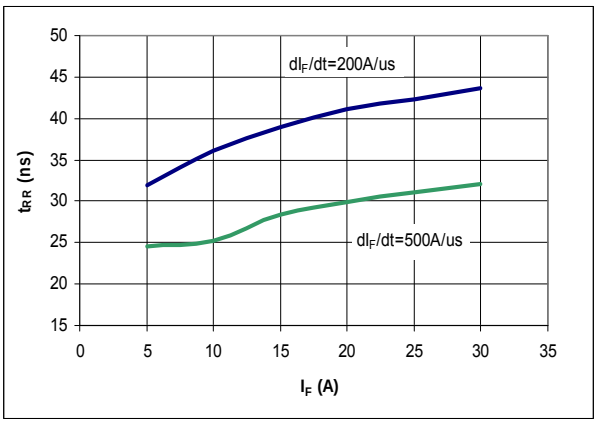

Figure 6. Typical t_{RR} vs I_F at T_J = 125 °C

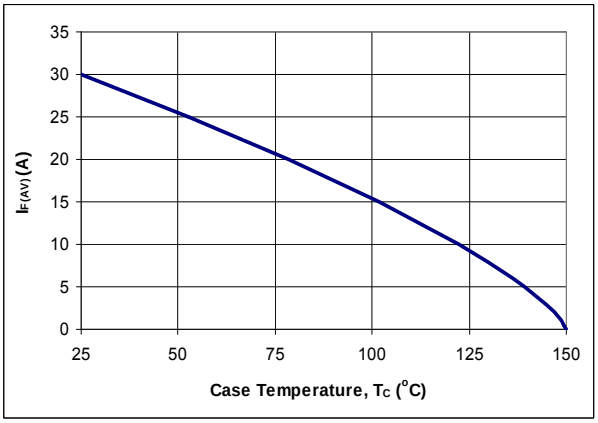

Figure 7. DC Current Derating Curve

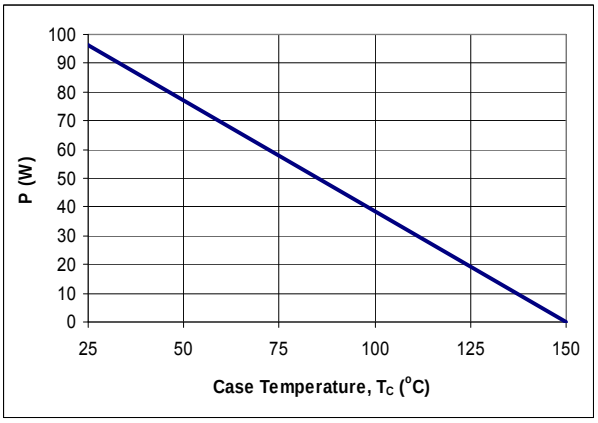

Figure 8. Power Derating Curve

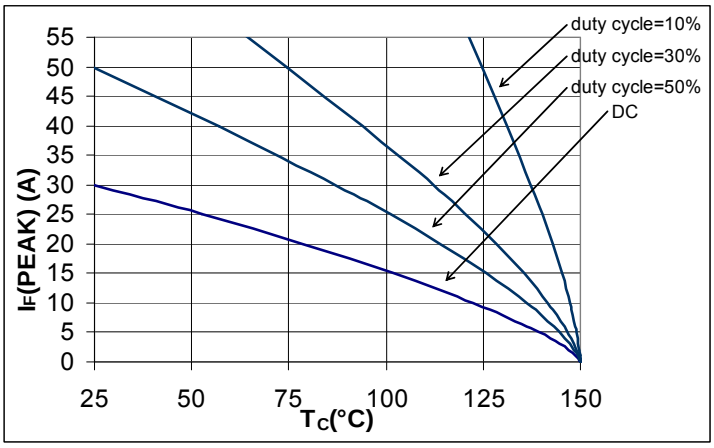

Figure 9. I_F(PEAK) vs T_C, f=70 kHz

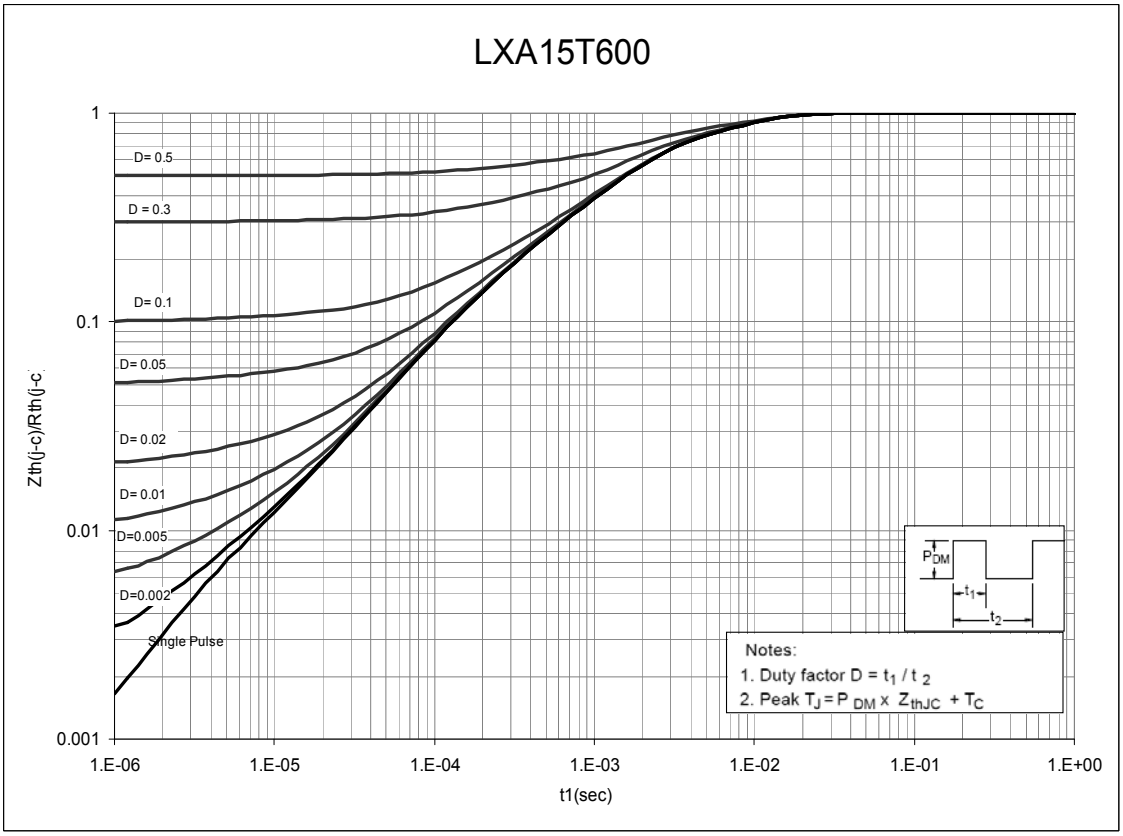

Figure 10. Normalized Maximum Transient Thermal Impedance

Dimensional Outline Drawings

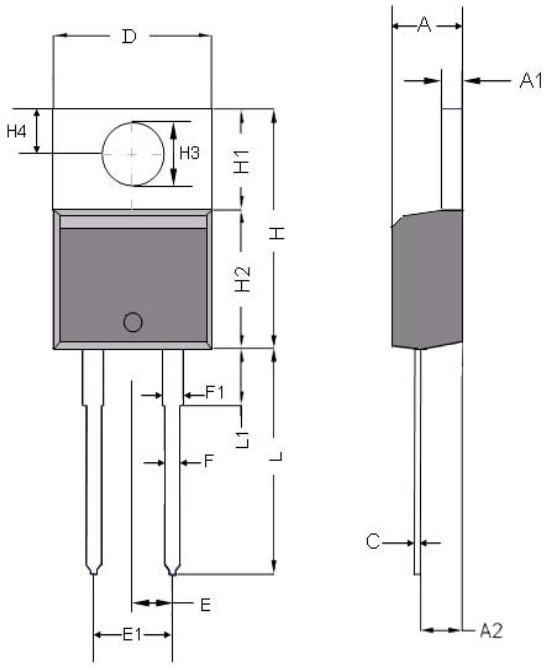

	Millimeters	
Dim	**MIN**	**MAX**
A	4.32	4.70
A1	1.14	1.40
A2	2.03	2.79
C	0.34	0.610
D	9.65	10.67
E	2.49	2.59
E1	4.98	5.18
F	0.508	1.016
F1	1.14	1.78
H	14.71	16.51
H1	5.84	6.55
H2	8.51	9.25
H3	3.53	3.96
H4	2.54	3.05
L	12.70	14.22
L1	-	6.35

Mechanical Mounting Method	**Maximum Torque / Pressure specification**
Screw through hole in package tab	1 Newton Meter (nm) or 8.8 inch-pounds (lb-in)
Clamp against package body	12.3 kilogram-force per square centimeter (kgf/cm^2) or 175 lbf/in^2

Soldering time and temperature: This product has been designed for use with high-temperature, lead-free solder. The component leads can be subjected to a maximum temperature of 300 °C, for up to 10 seconds. See Application Note AN-303, for more details.

Ordering Information

Part Number	Package	Packing
LXA15T600	TO-220AC	50 units/tube

The information contained in this document is subject to change without notice.

Revision	Notes	Date
1.0	Released by Qspeed	08/09
1.1	Converted to Power Integrations Document	01/11
1.1	Stop Point of t_{RR} error corrected due to typo in Figure 1	11/13

For the latest updates, visit our website: www.powerint.com

Power Integrations reserves the right to make changes to its products at any time to improve reliability or manufacturability. Power Integrations does not assume any liability arising from the use of any device or circuit described herein. POWER INTEGRATIONS MAKES NO WARRANTY HEREIN AND SPECIFICALLY DISCLAIMS ALL WARRANTIES INCLUDING, WITHOUT LIMITATION, THE IMPLIED WARRANTIES OF MERCHANTABILITY, FITNESS FOR A PARTICULAR PURPOSE, AND NON-INFRINGEMENT OF THIRD PARTY RIGHTS.

PATENT INFORMATION
The products and applications illustrated herein (including transformer construction and circuits' external to the products) may be covered by one or more U.S. and foreign patents, or potentially by pending U.S. and foreign patent applications assigned to Power Integrations. A complete list of Power Integrations' patents may be found at www.powerint.com. Power Integrations grants its customers a license under certain patent rights as set forth at http://www.powerint.com/ip.htm.

The PI Logo, TOPSwitch, TinySwitch, LinkSwitch, LYTSwitch, DPA-Switch, PeakSwitch, CAPZero, SENZero, LinkZero, HiperPFS, HiperTFS, HiperLCS, Qspeed, EcoSmart, Clampless, E-Shield, Filterfuse, StackFET, PI Expert and PI FACTS are trademarks of Power Integrations, Inc. Other trademarks are property of their respective companies. ©Copyright 2013 Power Integrations, Inc.

Power Integrations Worldwide Sales Support Locations

WORLD HEADQUARTERS
5245 Hellyer Avenue
San Jose, CA 95138, USA.
Main: +1-408-414-9200
Customer Service:
Phone: +1-408-414-9665
Fax: +1-408-414-9765
e-mail: usasales@powerint.com

GERMANY
Lindwurmstrasse 114
80337, Munich
Germany
Phone: +49-895-527-39110
Fax: +49-895-527-39200
e-mail:
eurosales@powerint.com

JAPAN
Kosei Dai-3 Building
2-12-11, Shin-Yokohama,
Kohoku-ku, Yokohama-shi,
Kanagawa 222-0033
Japan
Phone: +81-45-471-1021
Fax: +81-45-471-3717
e-mail: japansales@powerint.com

TAIWAN
5F, No. 318, Nei Hu Rd.,
Sec. 1
Nei Hu District
Taipei 11493, Taiwan R.O.C.
Phone: +886-2-2659-4570
Fax: +886-2-2659-4550
e-mail:
taiwansales@powerint.com

CHINA (SHANGHAI)
Rm 2410, Charity Plaza, No. 88,
North Caoxi Road,
Shanghai, PRC 200030
Phone: +86-21-6354-6323
Fax: +86-21-6354-6325
e-mail: chinasales@powerint.com

INDIA
#1, 14th Main Road
Vasanthanagar
Bangalore-560052
India
Phone: +91-80-4113-8020
Fax: +91-80-4113-8023
e-mail:
indiasales@powerint.com

KOREA
RM 602, 6FL
Korea City Air Terminal B/D,
159-6
Samsung-Dong, Kangnam-Gu,
Seoul, 135-728 Korea
Phone: +82-2-2016-6610
Fax: +82-2-2016-6630
e-mail: koreasales@powerint.com

EUROPE HQ
1st Floor, St. James's House
East Street, Farnham
Surrey GU9 7TJ
United Kingdom
Phone: +44 (0) 1252-730-141
Fax: +44 (0) 1252-727-689
e-mail:
eurosales@powerint.com

CHINA (SHENZHEN)
3rd Floor, Block A,
Zhongtou International Business
Center, No. 1061, Xiang Mei Rd,
FuTian District, ShenZhen,
China, 518040
Phone: +86-755-8379-3243
Fax: +86-755-8379-5828
e-mail: chinasales@powerint.com

ITALY
Via Milanese 20, 3rd. Fl.
20099 Sesto San Giovanni
(MI) Italy
Phone: +39-024-550-8701
Fax: +39-028-928-6009
e-mail:
eurosales@powerint.com

SINGAPORE
51 Newton Road,
#19-01/05 Goldhill Plaza
Singapore, 308900
Phone: +65-6358-2160
Fax: +65-6358-2015
e-mail:
singaporesales@powerint.com

APPLICATIONS HOTLINE
World Wide +1-408-414-9660

APPLICATIONS FAX
World Wide +1-408-414-9760