Package Information

Package Design Specifications, Tape and Reel and Assembly Information

Package Design Specifications

Package Identifier	Package Type	Package Category	Package Description
D	SO-8	SO	8 LEAD SO
	SO-8C		7 LEAD SO (PIN #3 MISSING)
E	eSIP-7C	eSIP	7/6 LEAD eSIP (PIN #6 MISSING), STANDARD EXPOSED PAD
	eSIP-7G		7/6 LEAD eSIP (PIN #6 MISSING) SMALL EXPOSED PAD
F	TO-262-7C	TO-262	7/6 LEAD TO-262 (PIN #6 MISSING)
G	SMD-8	SMD	8 LEAD SMD (GULL-WING PDIP)
	SMD-8B		7 LEAD SMD (GULL-WING PDIP), PIN #6 MISSING
	SMD-8C		7 LEAD SMD (GULL-WING PDIP), PIN #3 MISSING
H	eSIP-16B	eSIP	16/12 LEAD eSIP (PIN #2, 4, 12, 15 MISSING), MEDIUM EXPOSED PAD, 3-ROW LEADFORM
	eSIP-16C		16/13 LEAD eSIP (PIN #2, 12, 15 MISSING), SMALL EXPOSED PAD, 2-ROW LEADFORM
	eSIP-16D		16/13 LEAD eSIP (PIN #2, 12, 15 MISSING), EXTRA LARGE EXPOSED PAD, 2-ROW LEADFORM
	eSIP-16F		16/12 LEAD eSIP (PIN #2, 4, 12, 15 MISSING), MEDIUM EXPOSED PAD, 2-ROW LEADFORM
	eSIP-16J		16/13 LEAD eSIP (PIN #2, 12, 15 MISSING), NO EXPOSED PAD, 2-ROW LEADFORM
K	eSOP-12B	eSOP	12/11 LEAD eSOP (PIN #5 MISSING), STD EXPOSED PAD
L	eSIP-7F	eSIP	7/6 LEAD eSIP (PIN #6 MISSING), L-BEND, STANDARD EXPOSED PAD
	eSIP-16G		16/13 LEAD eSIP (PIN #2, 12, 15 MISSING), EXTRA LARGE EXPOSED PAD, L-BEND LEADFORM
	eSIP-16K		16/13 LEAD eSIP (PIN #2, 12, 15 MISSING), NO EXPOSED PAD, L-BEND LEADFORM
P	PDIP-8	PDIP	8 LEAD PDIP
	PDIP-8B		7 LEAD PDIP (PIN #6 MISSING)
	PDIP-8C		7 LEAD PDIP (PIN #3 MISSING)
	PDIP-24		24 LEAD PDIP
R	TO-263-7C	TO-263	7/6 LEAD TO-263 (PIN #6 MISSING)
V	eDIP-12B	eDIP	12/11 LEAD eDIP (PIN #5 MISSING), STD EXPOSED PAD
Y	TO-220-7C	TO-220	7/6 LEAD TO-220 (PIN #6 MISSING)

Package Identifier Table.

TO-220-7C (Y Package)

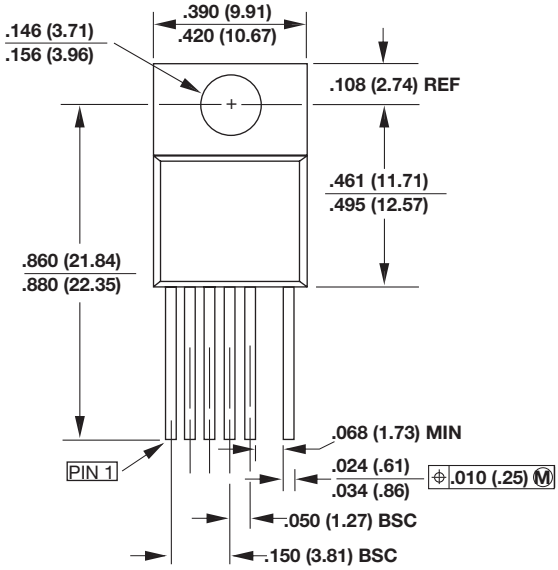

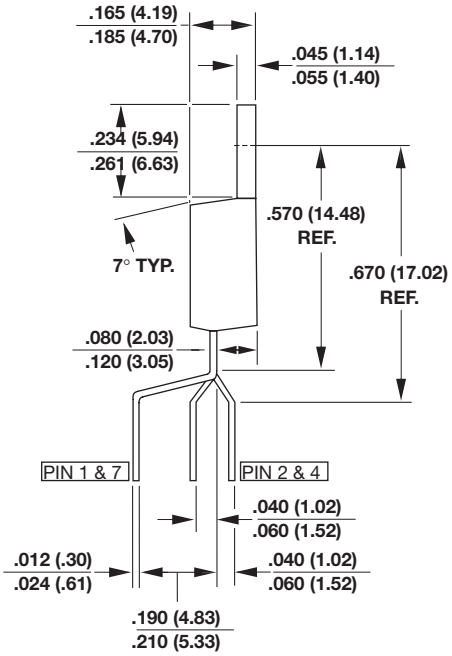

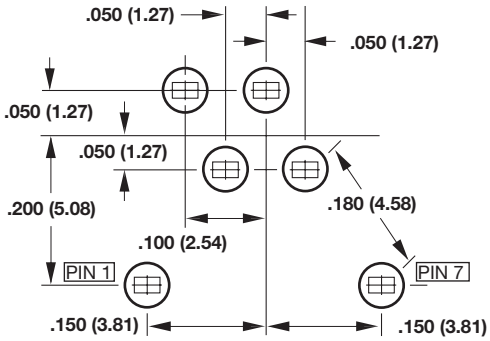

Y07C MOUNTING HOLE PATTERN

Notes:

1. Controlling dimensions are inches. Millimeter dimensions are shown in parentheses.
2. Pin numbers start with Pin 1, and continue from left to right when viewed from the front.
3. Dimensions do not include mold flash or other protrusions. Mold flash or protrusions shall not exceed .006 (.15 mm) on any side.
4. Minimum metal to metal spacing at the package body for omitted pin locations is .068 in. (1.73 mm).
5. Position of terminals to be measured at a location .25 (6.35) below the package body.
6. All terminals are solder plated.

PI-2644-040110

TO-263-7C (R Package)

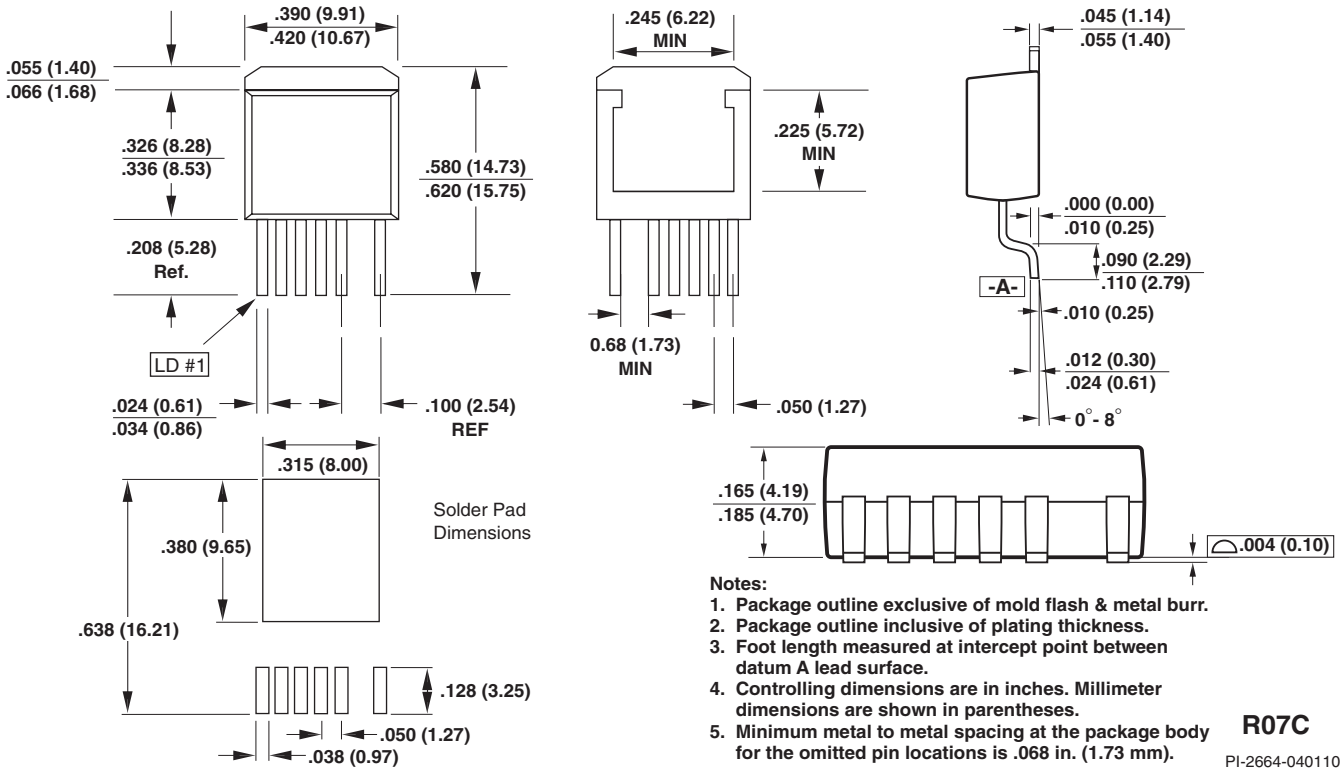

Notes:
1. Package outline exclusive of mold flash & metal burr.
2. Package outline inclusive of plating thickness.
3. Foot length measured at intercept point between datum A lead surface.
4. Controlling dimensions are in inches. Millimeter dimensions are shown in parentheses.
5. Minimum metal to metal spacing at the package body for the omitted pin locations is .068 in. (1.73 mm).

R07C

PI-2664-040110

TO-262-7C (F Package)

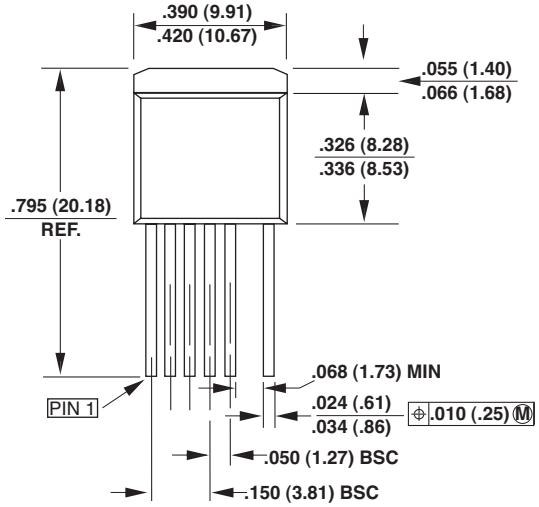

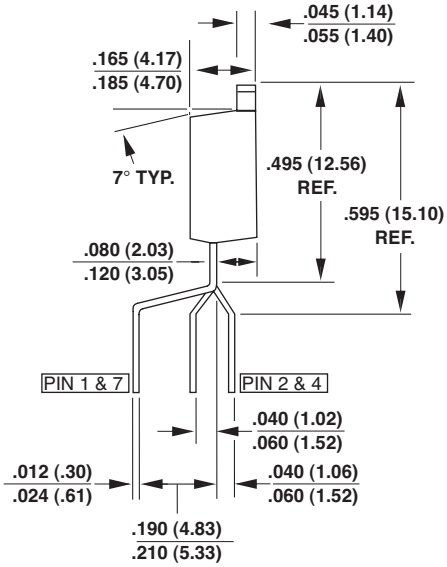

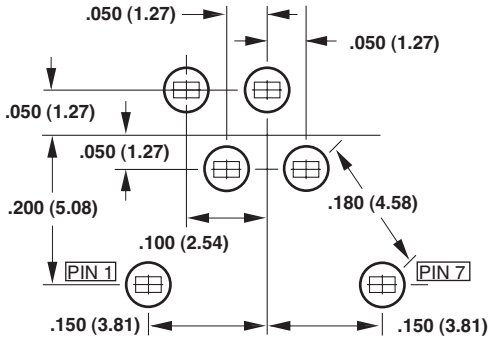

F07C MOUNTING HOLE PATTERN

Notes:

1. Controlling dimensions are inches. Millimeter dimensions are shown in parentheses.
2. Pin numbers start with Pin 1, and continue from left to right when viewed from the front.
3. Dimensions do not include mold flash or other protrusions. Mold flash or protrusions shall not exceed .006 (.15 mm) on any side.
4. Minimum metal to metal spacing at the package body for omitted pin locations is .068 inch (1.73 mm).
5. Position of terminals to be measured at a location .25 (6.35) below the package body.
6. All terminals are solder plated.

PI-2757-040110

PDIP-8 (P Package)

DIM	Inches	mm
A	0.367-0.387	9.32-9.83
B	0.240-0.260	6.10-6.60
C	0.125-0.145	3.18-3.68
G	0.015-0.040	0.38-1.02
H	0.120-0.140	3.05-3.56
J1	0.057-0.068	1.45-1.73
J2	0.014-0.022	0.36-0.56
K	0.008-0.015	0.20-0.38
L	0.100 BSC	2.54 BSC
M	0.030 (MIN)	0.76 (MIN)
N	0.300-0.320	7.62-8.13
P	0.300-0.390	7.62-9.91
Q	0.300 BSC	7.62 BSC

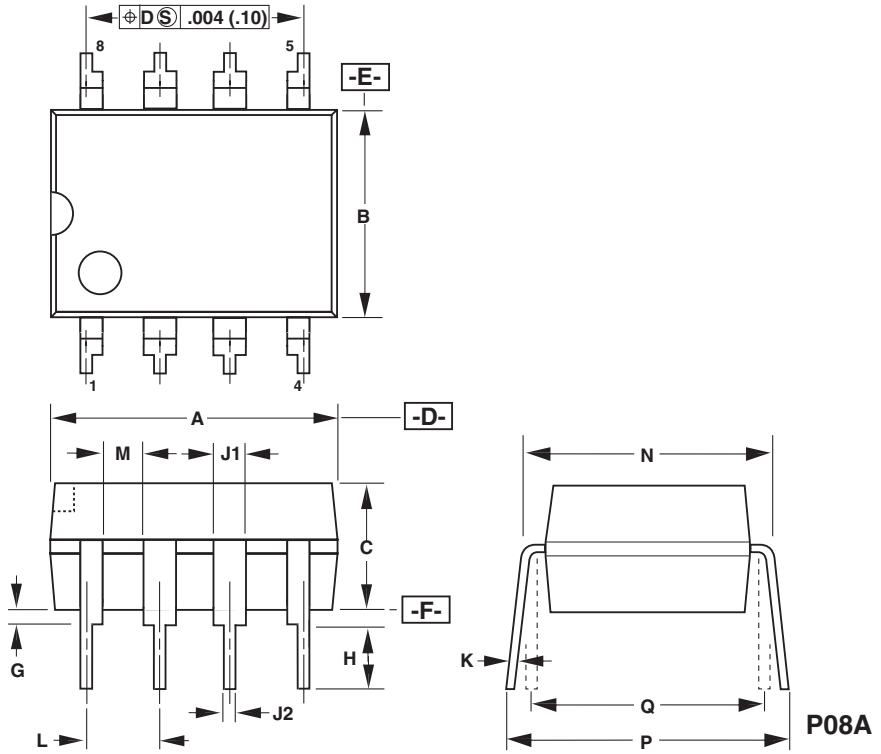

Notes:
1. Package dimensions conform to JEDEC specification MS-001-AB for standard dual in-line (DIP) package .300 inch row spacing (PLASTIC) 8 leads (issue B, 7/85).
2. Controlling dimensions are inches.
3. Dimensions shown do not include mold flash or other protrusions. Mold flash or protrusions shall not exceed .006 (.15) on any side.
4. D, E and F are reference datums on the molded body.

PI-2076-040110

PDIP-8B (P Package)

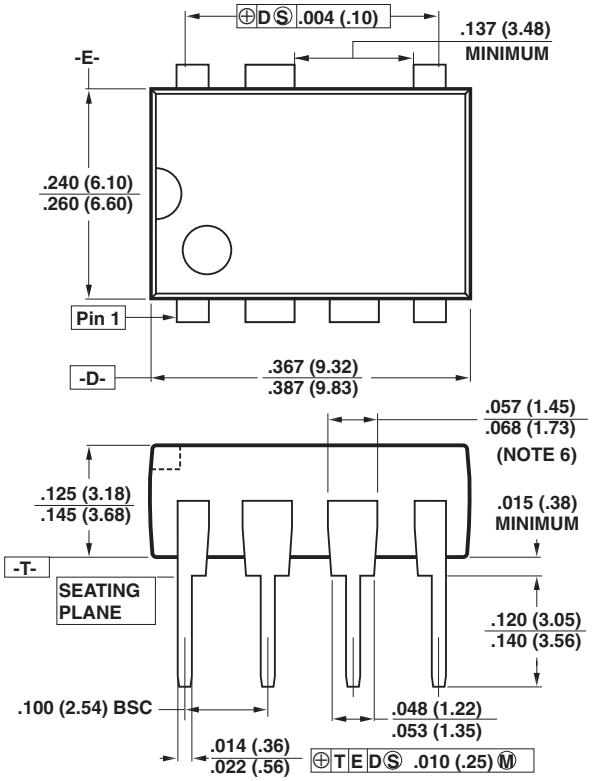

Notes:
1. Package dimensions conform to JEDEC specification MS-001-AB (Issue B 7/85) for standard dual-in-line (DIP) package with .300 inch row spacing.
2. Controlling dimensions are inches. Millimeter sizes are shown in parentheses.
3. Dimensions shown do not include mold flash or other protrusions. Mold flash or protrusions shall not exceed .006 (.15) on any side.
4. Pin locations start with Pin 1, and continue counter-clockwise to Pin 8 when viewed from the top. The notch and/or dimple are aids in locating Pin 1. Pin 6 is omitted.
5. Minimum metal to metal spacing at the package body for the omitted lead location is .137 inch (3.48 mm).
6. Lead width measured at package body.
7. Lead spacing measured with the leads constrained to be perpendicular to plane T.

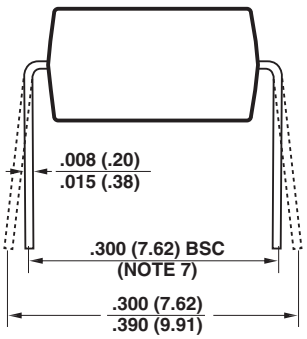

P08B

PI-2551-040110

PDIP-8C (P Package)

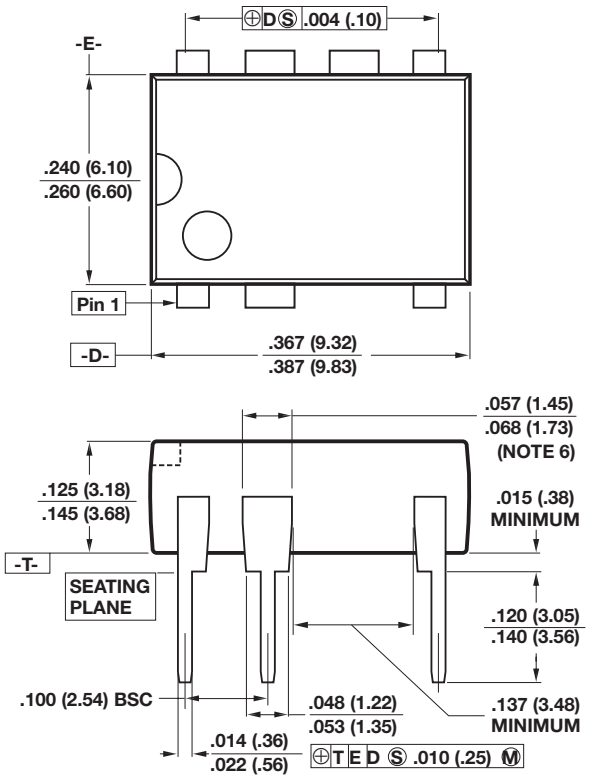

Notes:

1. Package dimensions conform to JEDEC specification MS-001-AB (Issue B 7/85) for standard dual-in-line (DIP) package with .300 inch row spacing.
2. Controlling dimensions are inches. Millimeter sizes are shown in parentheses.
3. Dimensions shown do not include mold flash or other protrusions. Mold flash or protrusions shall not exceed .006 (.15) on any side.
4. Pin locations start with Pin 1, and continue counter-clockwise to Pin 8 when viewed from the top. The notch and/or dimple are aids in locating Pin 1. Pin 3 is omitted.
5. Minimum metal to metal spacing at the package body for the omitted lead location is .137 inch (3.48 mm).
6. Lead width measured at package body.
7. Lead spacing measured with the leads constrained to be perpendicular to plane T.

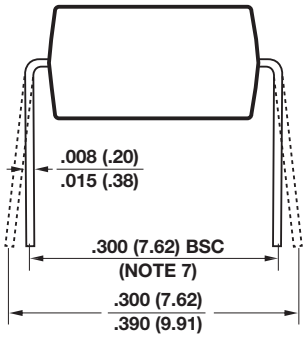

P08C

PI-3933-040110

SDIP-10C (M Package)

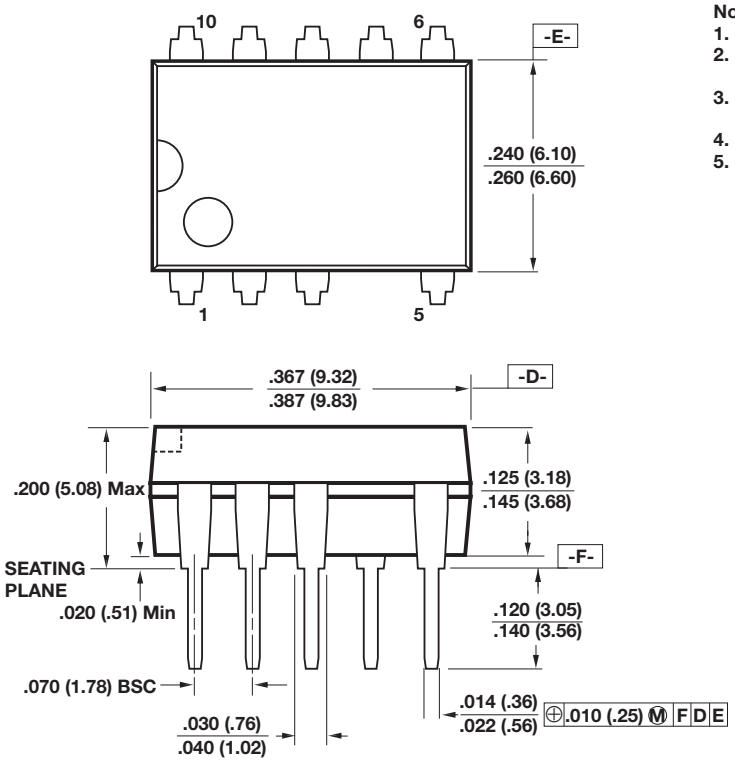

Notes:

1. Package dimensions conform to JEDEC specification MS-019.
2. Controlling dimensions are inches. Millimeter sizes are shown in parentheses.
3. Dimensions shown do not include mold flash or other protrusions. Mold flash or protrusions shall not exceed .006 (.15) on any side.
4. D, E and F are reference datums.
5. Dimensioning and tolerancing conform to ASME Y14.5M-1994.

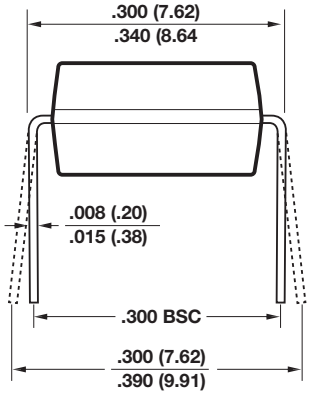

P10C

PI-4648-101507

PDIP-24 (0.300”) (P Package)

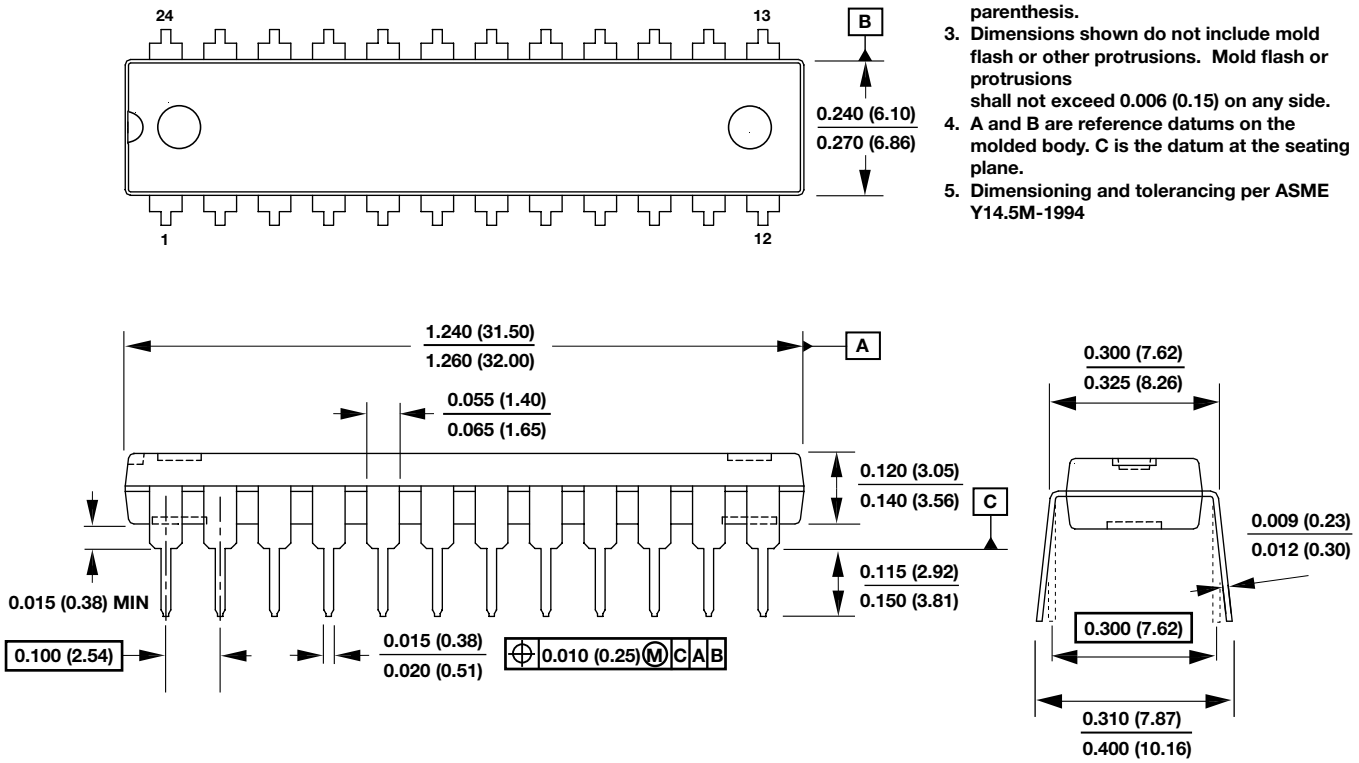

Notes:

1. Package dimensions conform to JEDEC specification MS-001.
2. Controlling dimensions are inches. Dimensions in millimeters are in parenthesis.
3. Dimensions shown do not include mold flash or other protrusions. Mold flash or protrusions shall not exceed 0.006 (0.15) on any side.
4. A and B are reference datums on the molded body. C is the datum at the seating plane.
5. Dimensioning and tolerancing per ASME Y14.5M-1994

PI-5181-040110

eDIP-12B (V Package)

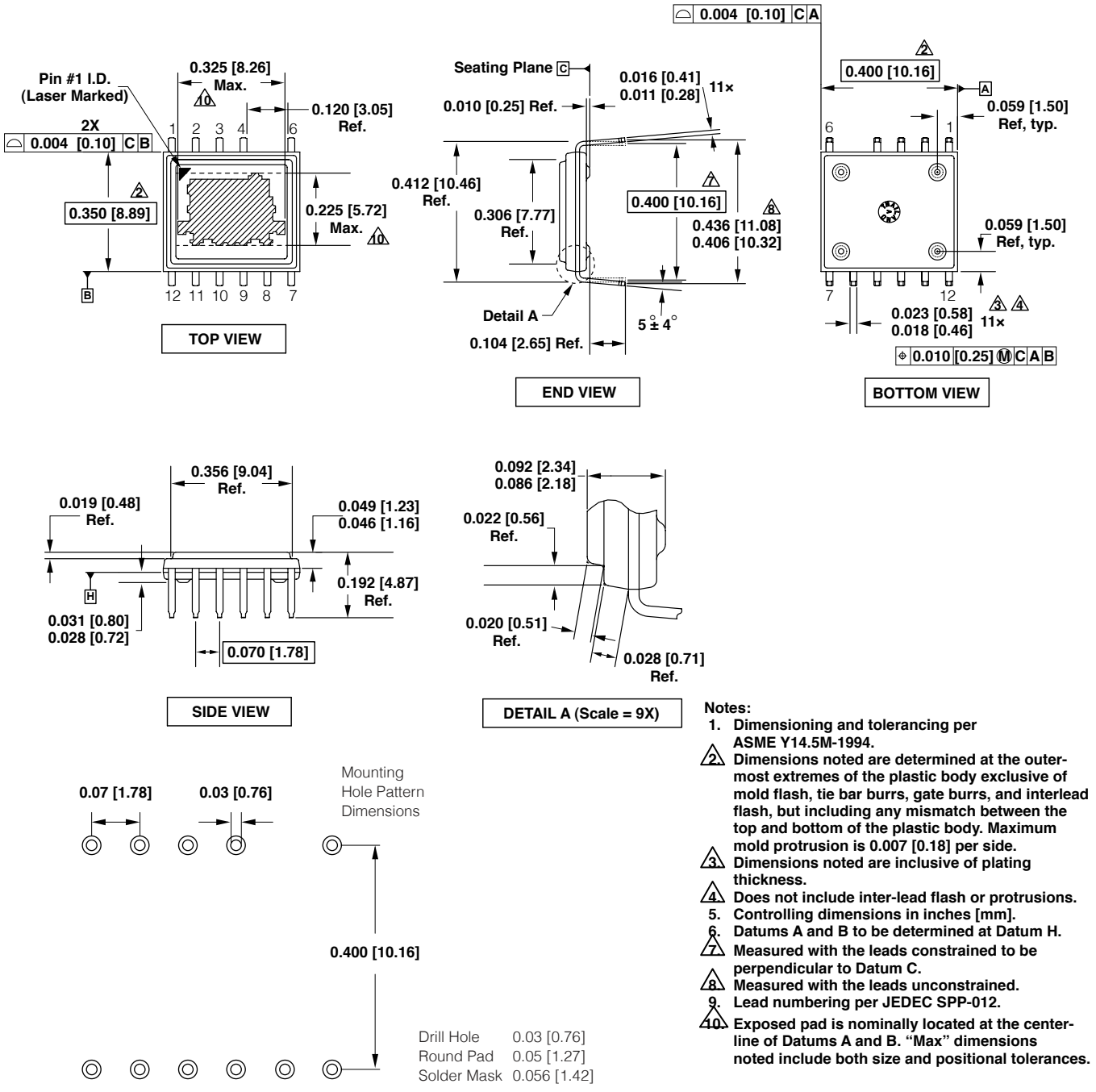

Notes:

1. Dimensioning and tolerancing per ASME Y14.5M-1994.
2. Dimensions noted are determined at the outermost extremes of the plastic body exclusive of mold flash, tie bar burrs, gate burrs, and interlead flash, but including any mismatch between the top and bottom of the plastic body. Maximum mold protrusion is 0.007 [0.18] per side.
3. Dimensions noted are inclusive of plating thickness.
4. Does not include inter-lead flash or protrusions.
5. Controlling dimensions in inches [mm].
6. Datums A and B to be determined at Datum H.
7. Measured with the leads constrained to be perpendicular to Datum C.
8. Measured with the leads unconstrained.
9. Lead numbering per JEDEC SPP-012.
10. Exposed pad is nominally located at the centerline of Datums A and B. "Max" dimensions noted include both size and positional tolerances.

PI-5556a-100311

SMD-8 (G Package)

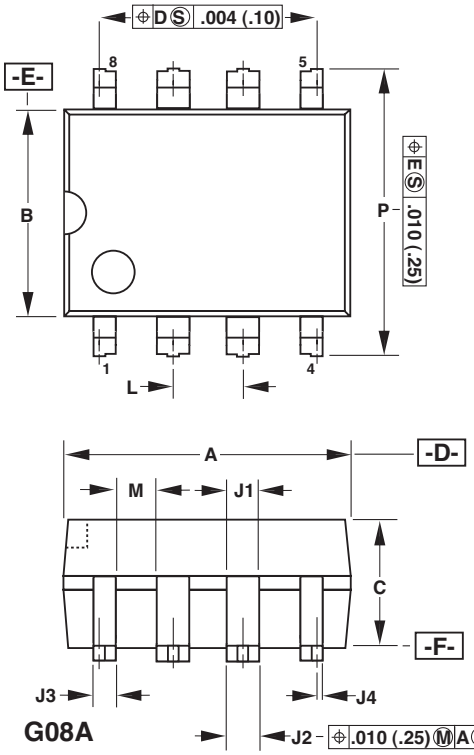

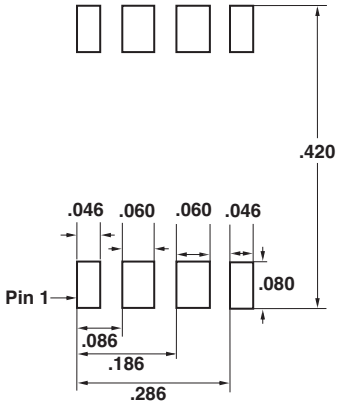

Solder Pad Dimensions

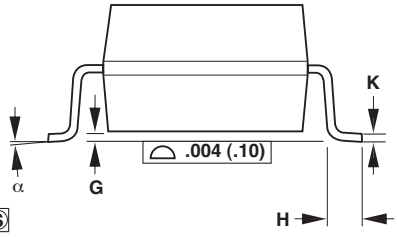

DIM	Inches	mm
A	0.367-0.387	9.32-9.83
B	0.240-0.260	6.10-6.60
C	0.125-0.145	3.18-3.68
G	0.004-0.012	0.10-0.30
H	0.036-0.044	0.91-1.12
J1	0.057-0.068	1.45-1.73
J2	0.048-0.053	1.22-1.35
J3	0.032-0.037	0.81-0.94
J4	0.007-0.011	0.18-0.28
K	0.010-0.012	0.25-0.30
L	0.100 BSC	2.54 BSC
M	0.030 (MIN)	0.76 (MIN)
P	0.372-0.388	9.45-9.86
α	0-8°	0-8°

Notes:
1. Package dimensions conform to JEDEC specification MS-001-AB (issue B, 7/85) except for lead shape and size.
2. Controlling dimensions are inches.
3. Dimensions shown do not include mold flash or other protrusions. Mold flash or protrusions shall not exceed .006 (.15) on any side.
4. D, E and F are reference datums on the molded body.

PI-2077-040110

SMD-8B (G Package)

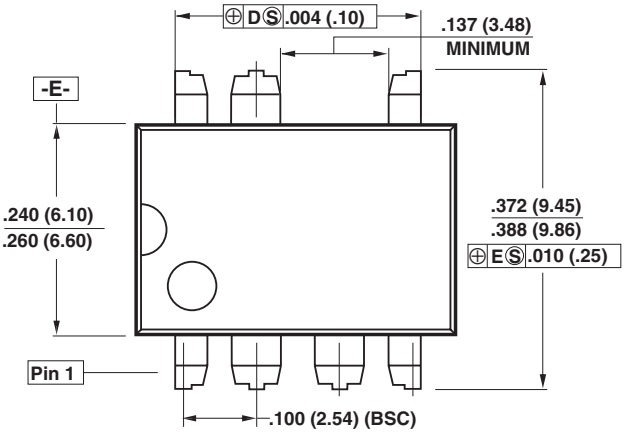

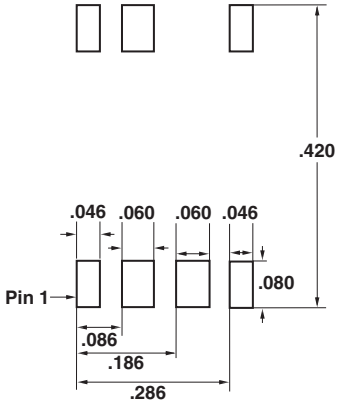

Solder Pad Dimensions

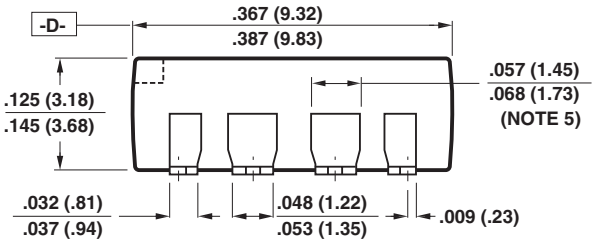

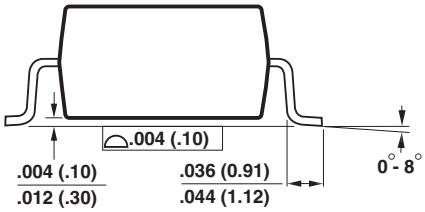

Notes:
1. Controlling dimensions are inches. Millimeter sizes are shown in parentheses.
2. Dimensions shown do not include mold flash or other protrusions. Mold flash or protrusions shall not exceed .006 (.15) on any side.
3. Pin locations start with Pin 1, and continue counter-clockwise to Pin 8 when viewed from the top. Pin 6 is omitted.
4. Minimum metal to metal spacing at the package body for the omitted lead location is .137 inch (3.48 mm).
5. Lead width measured at package body.
6. D and E are referenced datums on the package body.

G08B

PI-2546-040110

SMD-8C (G Package)

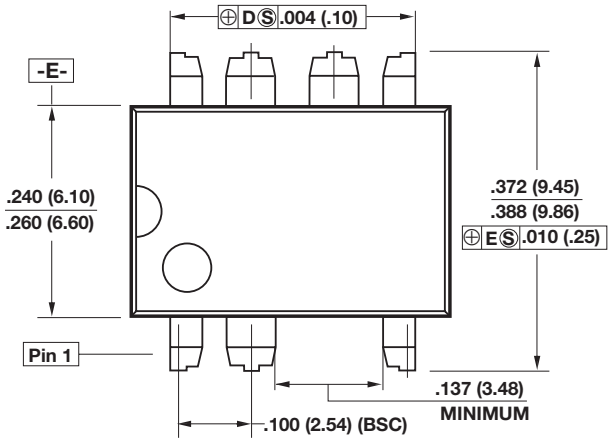

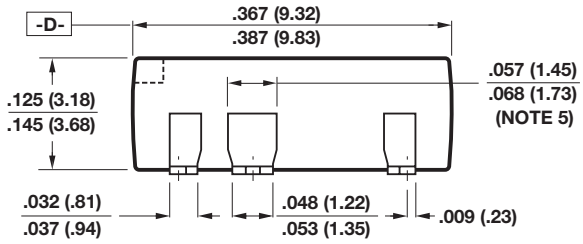

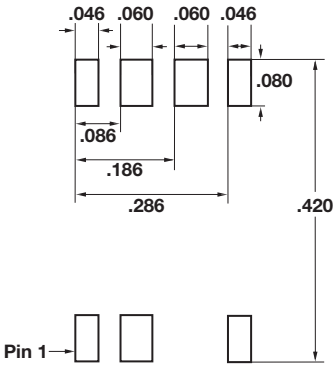

Solder Pad Dimensions

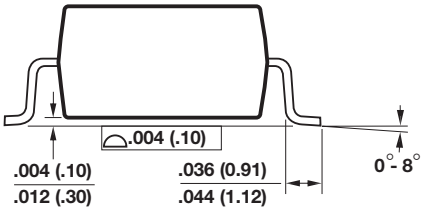

Notes:

1. Controlling dimensions are inches. Millimeter sizes are shown in parentheses.
2. Dimensions shown do not include mold flash or other protrusions. Mold flash or protrusions shall not exceed .006 (.15) on any side.
3. Pin locations start with Pin 1, and continue counter-clockwise to Pin 8 when viewed from the top. Pin 3 is omitted.
4. Minimum metal to metal spacing at the package body for the omitted lead location is .137 inch (3.48 mm).
5. Lead width measured at package body.
6. D and E are referenced datums on the package body.

G08C

PI-4015-101507

SO-8 (D Package)

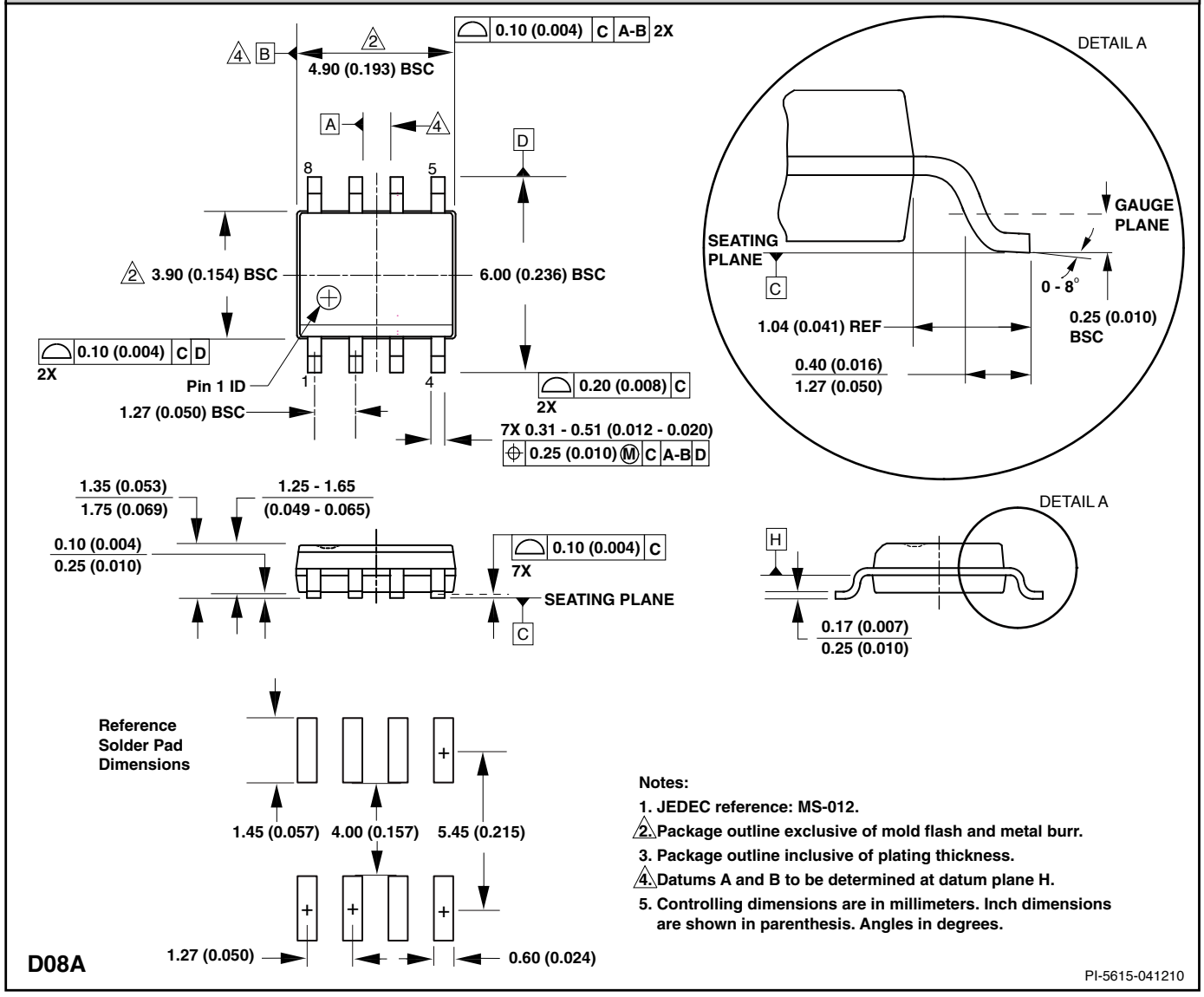

Notes:

1. JEDEC reference: MS-012.
2. Package outline exclusive of mold flash and metal burr.
3. Package outline inclusive of plating thickness.
4. Datums A and B to be determined at datum plane H.
5. Controlling dimensions are in millimeters. Inch dimensions are shown in parenthesis. Angles in degrees.

SO-8C (D Package)

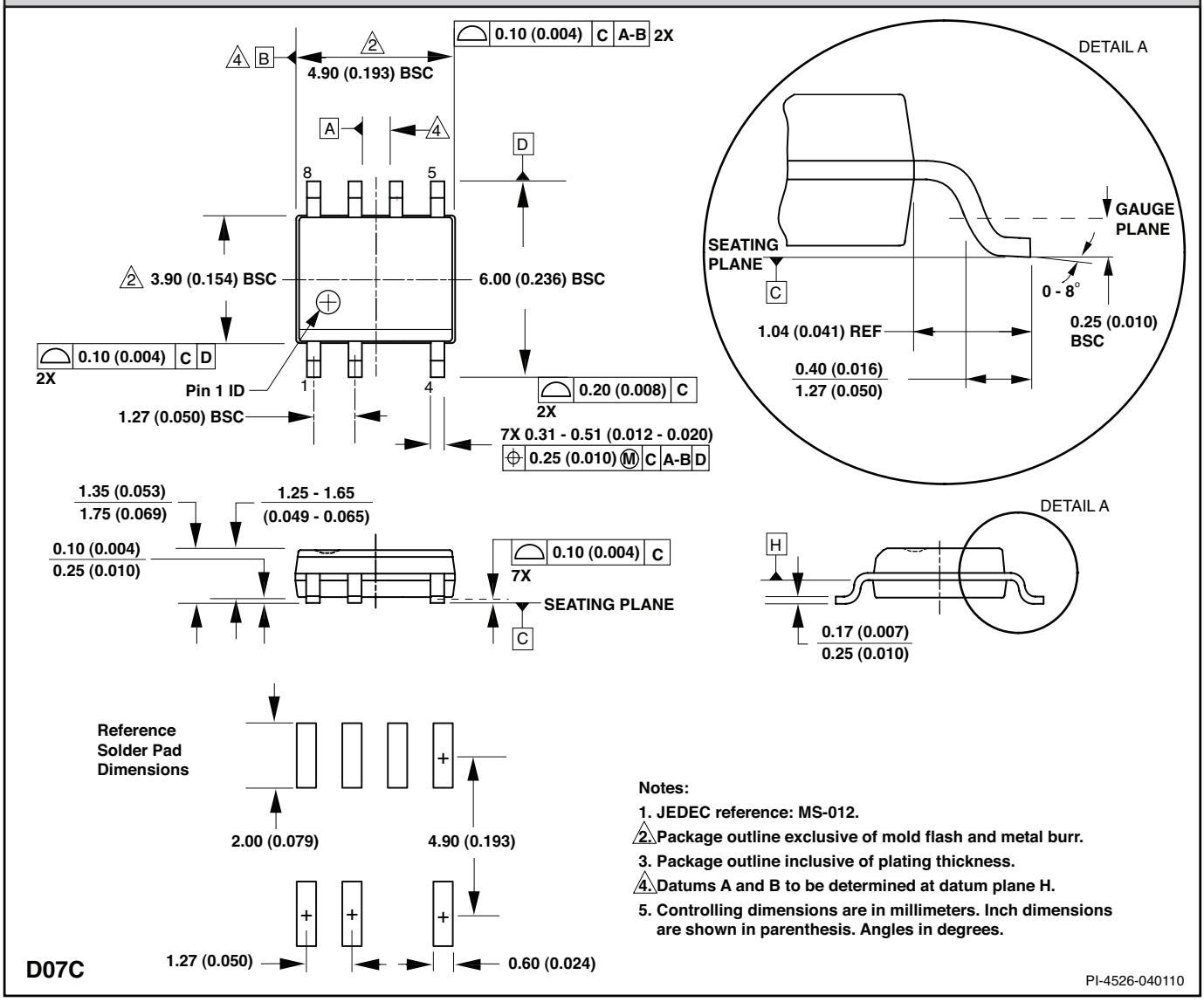

Notes:

1. JEDEC reference: MS-012.
2. Package outline exclusive of mold flash and metal burr.
3. Package outline inclusive of plating thickness.
4. Datums A and B to be determined at datum plane H.
5. Controlling dimensions are in millimeters. Inch dimensions are shown in parenthesis. Angles in degrees.

eSIP-7C (E Package)

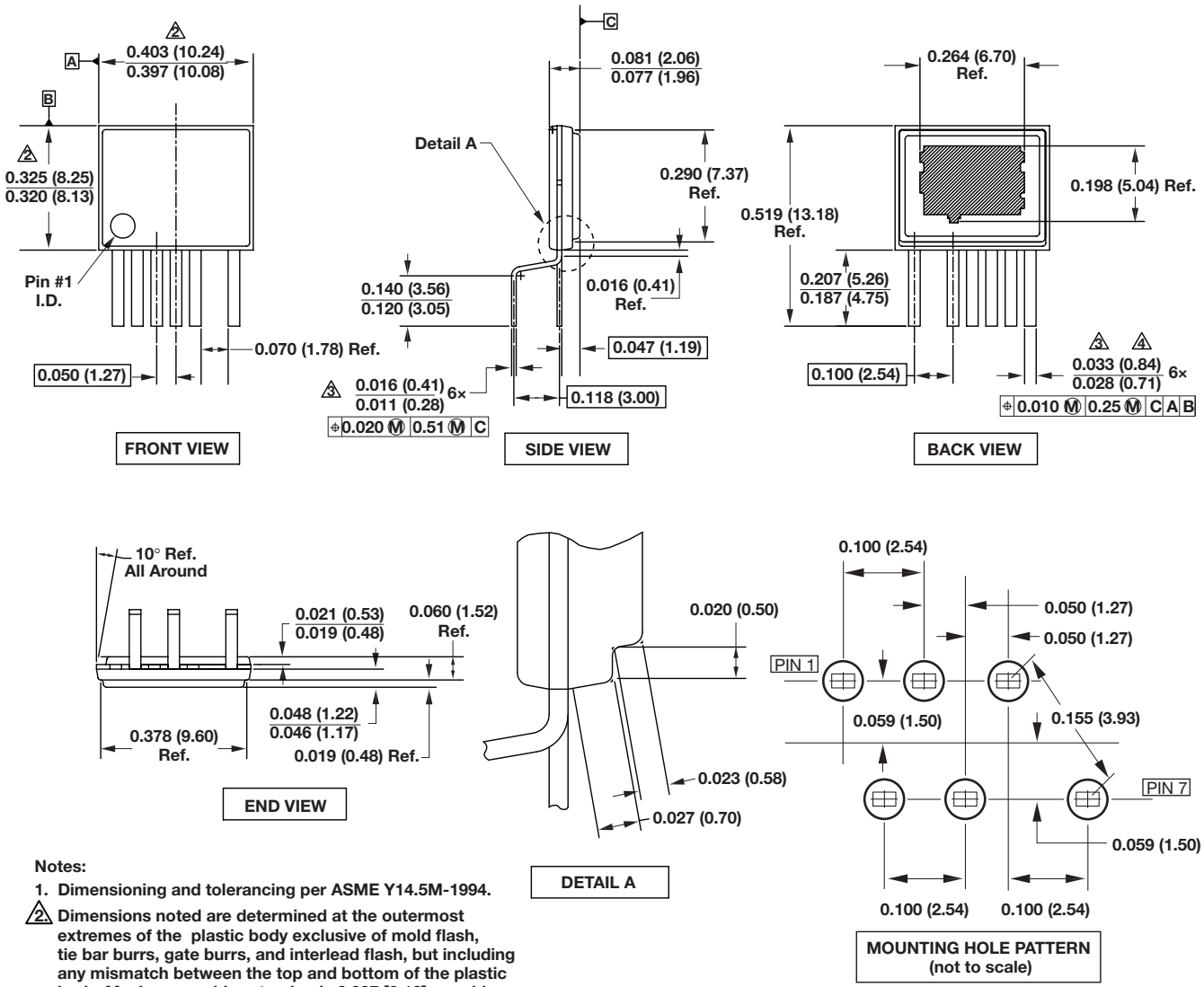

Notes:

1. Dimensioning and tolerancing per ASME Y14.5M-1994.
2. Dimensions noted are determined at the outermost extremes of the plastic body exclusive of mold flash, tie bar burrs, gate burrs, and interlead flash, but including any mismatch between the top and bottom of the plastic body. Maximum mold protrusion is 0.007 [0.18] per side.
3. Dimensions noted are inclusive of plating thickness.
4. Does not include inter-lead flash or protrusions.
5. Controlling dimensions in inches (mm).

PI-4917-061510

eSIP-7F (L Package)

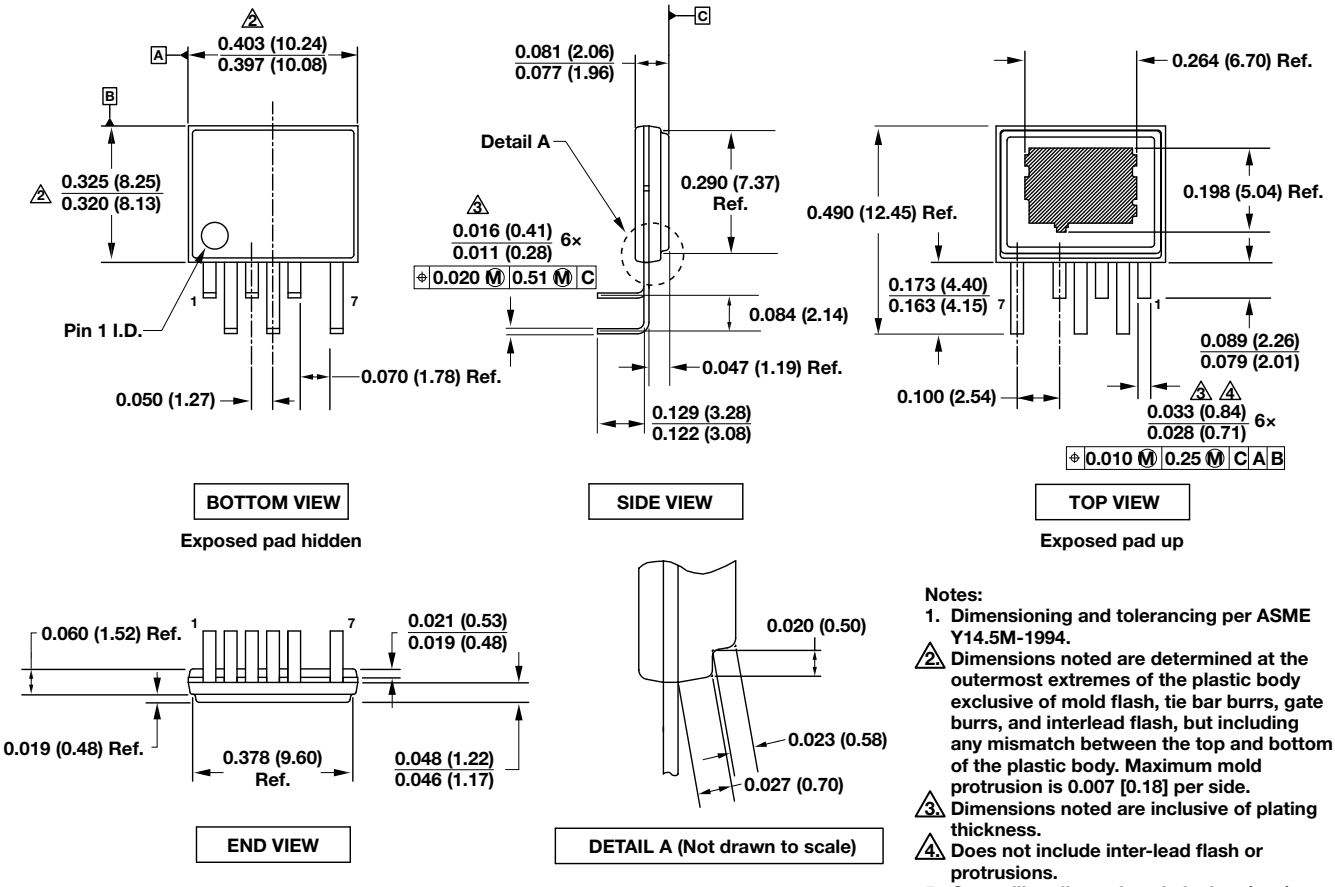

Notes:

1. Dimensioning and tolerancing per ASME Y14.5M-1994.
2. Dimensions noted are determined at the outermost extremes of the plastic body exclusive of mold flash, tie bar burrs, gate burrs, and interlead flash, but including any mismatch between the top and bottom of the plastic body. Maximum mold protrusion is 0.007 [0.18] per side.
3. Dimensions noted are inclusive of plating thickness.
4. Does not include inter-lead flash or protrusions.
5. Controlling dimensions in inches (mm).

PI-5204-061510

eSIP-7G (E Package)

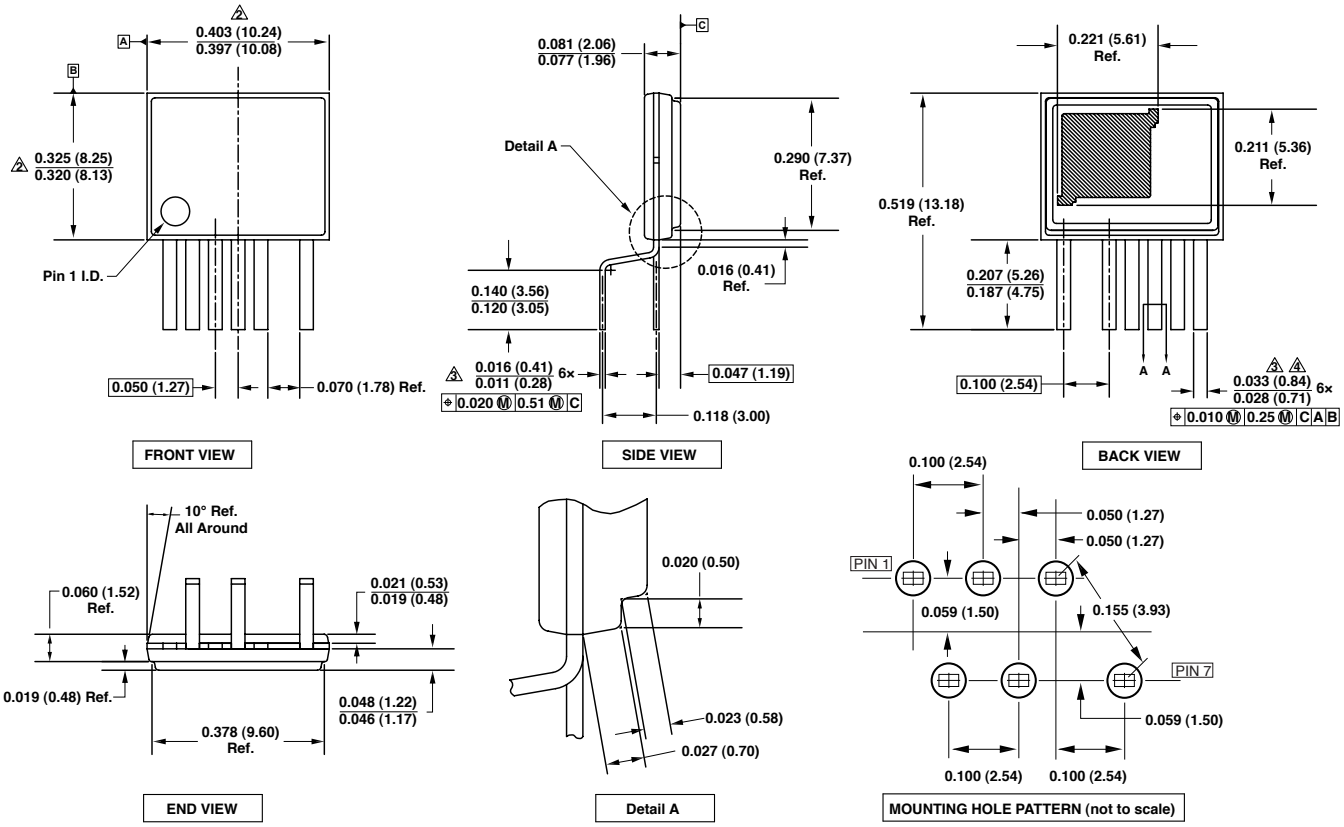

Notes:

1. Dimensioning and tolerancing per ASME Y14.5M-1994.
2. Dimensions noted are determined at the outermost extremes of the plastic body exclusive of mold flash, tie bar burrs, gate burrs, and interlead flash, but including any mismatch between the top and bottom of the plastic body. Maximum mold protrusion is 0.007 (0.18) per side.
3. Dimensions noted are inclusive of plating thickness.
4. Does not include interlead flash or protrusions.
5. Controlling dimensions in inches (mm).

PI-5711-110810

eSIP-16B (H Package)

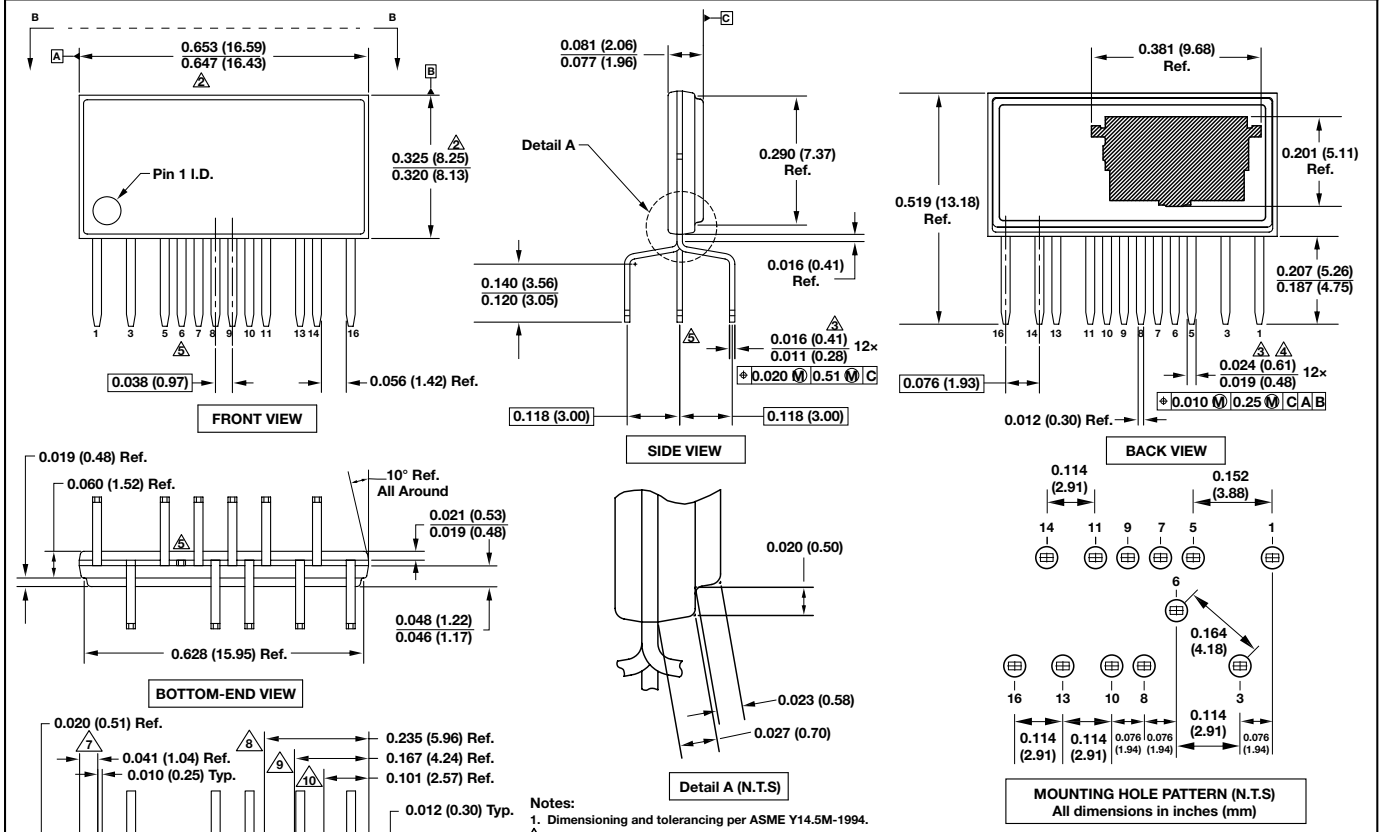

Notes:

1. Dimensioning and tolerancing per ASME Y14.5M-1994.
2. Dimensions noted are determined at the outermost extremes of the plastic body exclusive of mold flash, tie bar burrs, gate burrs, and interlead flash, but including any mismatch between the top and bottom of the plastic body. Maximum mold protrusion is 0.007 (0.18) per side.
3. Dimensions noted are inclusive of plating thickness.
4. Does not include interlead flash or protrusions.
5. Pin #6 is the only straight (unformed) lead.
6. Controlling dimensions in inches (mm).
7. 8. Tied to SOURCE (pin 6).
9. Tied to HS (pin 14).
10. 11. Tied to HD (pin 16).

PI-5300-021411

eSIP-16C (H Package)

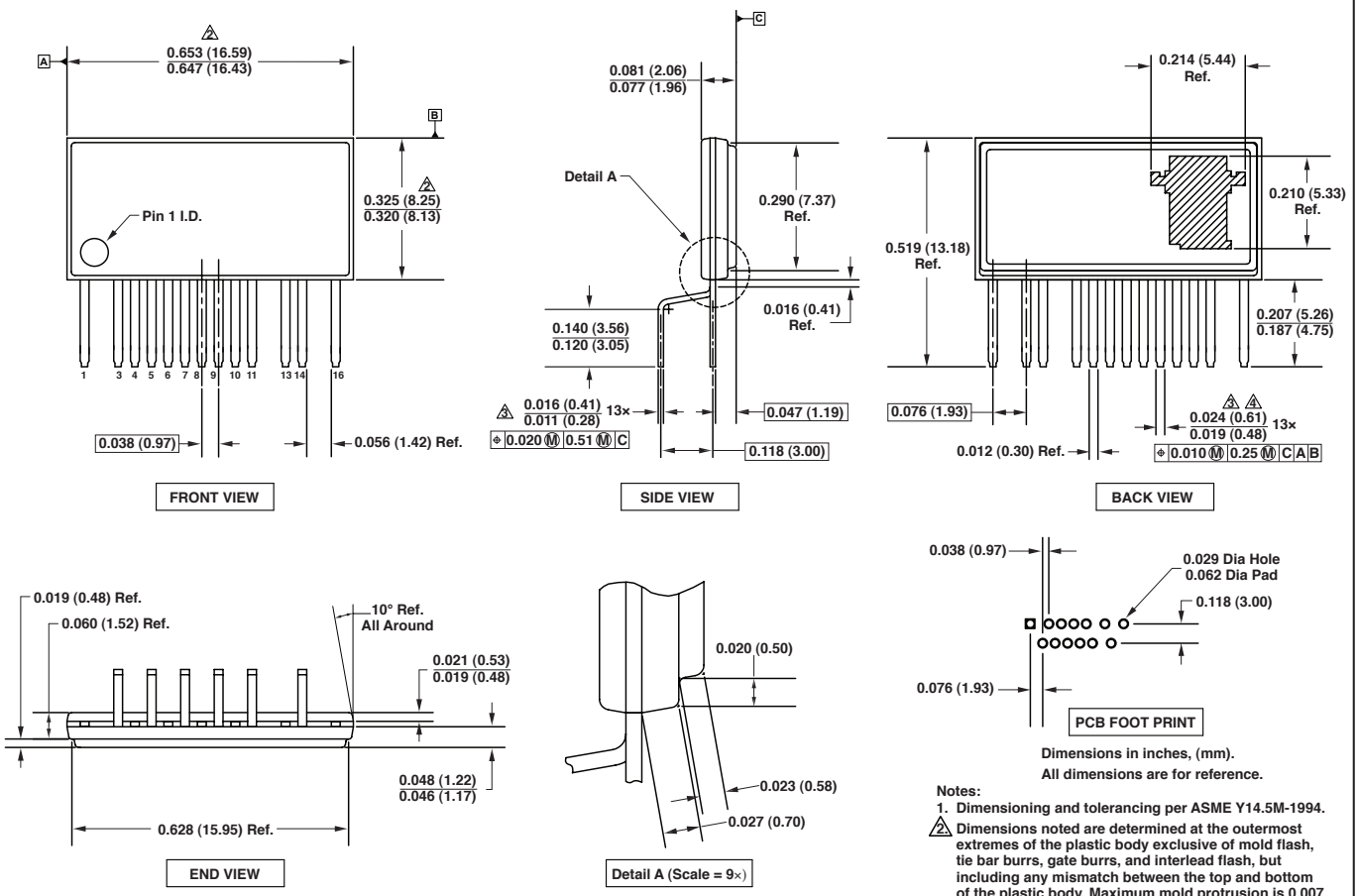

Dimensions in inches, (mm).
All dimensions are for reference.

Notes:
1. Dimensioning and tolerancing per ASME Y14.5M-1994.
2. Dimensions noted are determined at the outermost extremes of the plastic body exclusive of mold flash, tie bar burrs, gate burrs, and interlead flash, but including any mismatch between the top and bottom of the plastic body. Maximum mold protrusion is 0.007 [0.18] per side.
3. Dimensions noted are inclusive of plating thickness.
4. Does not include interlead flash or protrusions.
5. Controlling dimensions in inches (mm).

PI-5639-031011

eSIP-16D (H Package)

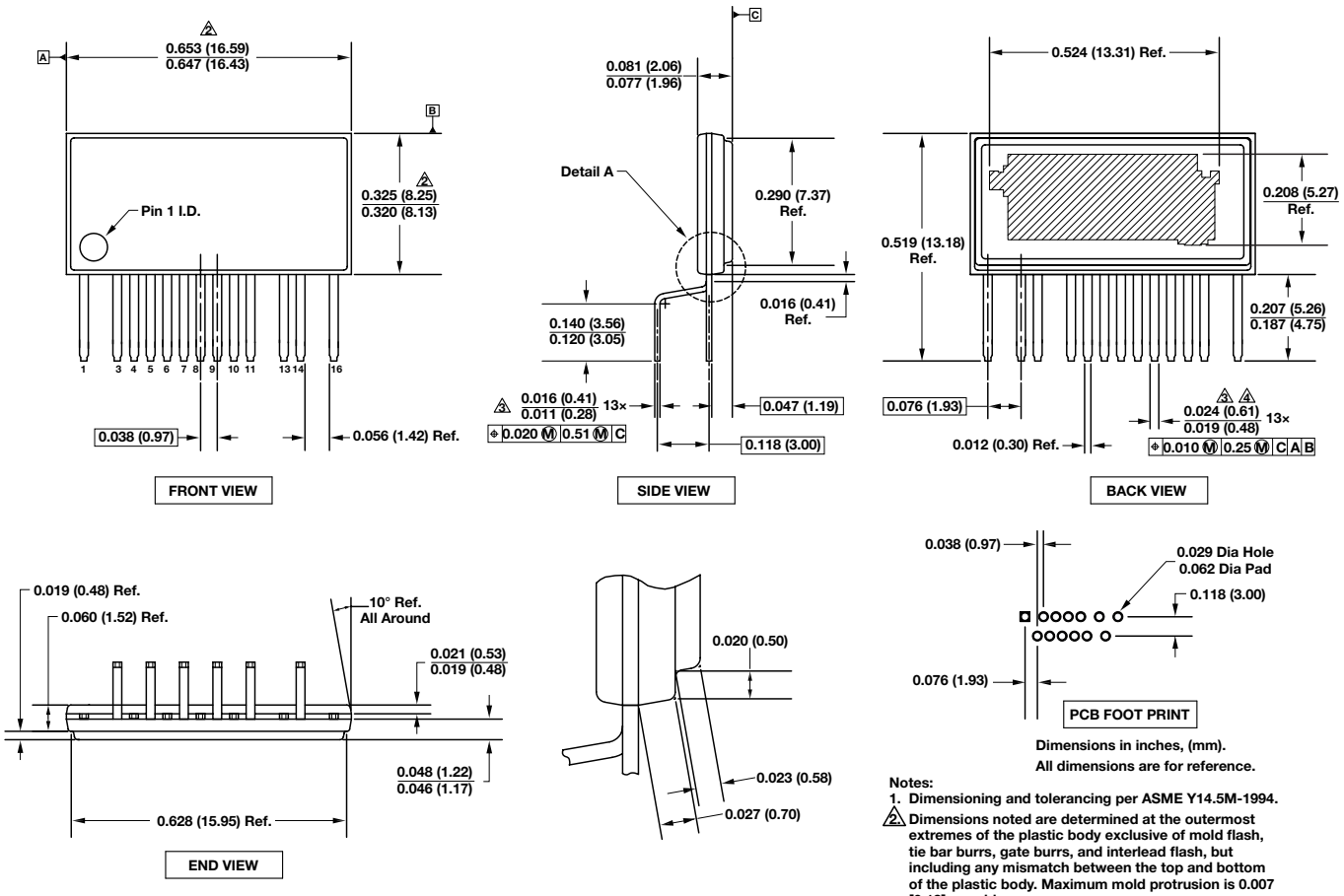

Dimensions in inches, (mm).
All dimensions are for reference.

Notes:

1. Dimensioning and tolerancing per ASME Y14.5M-1994.
2. Dimensions noted are determined at the outermost extremes of the plastic body exclusive of mold flash, tie bar burrs, gate burrs, and interlead flash, but including any mismatch between the top and bottom of the plastic body. Maximum mold protrusion is 0.007 [0.18] per side.
3. Dimensions noted are inclusive of plating thickness.
4. Does not include interlead flash or protrusions.
5. Controlling dimensions in inches (mm).

eSIP-16F (H Package)

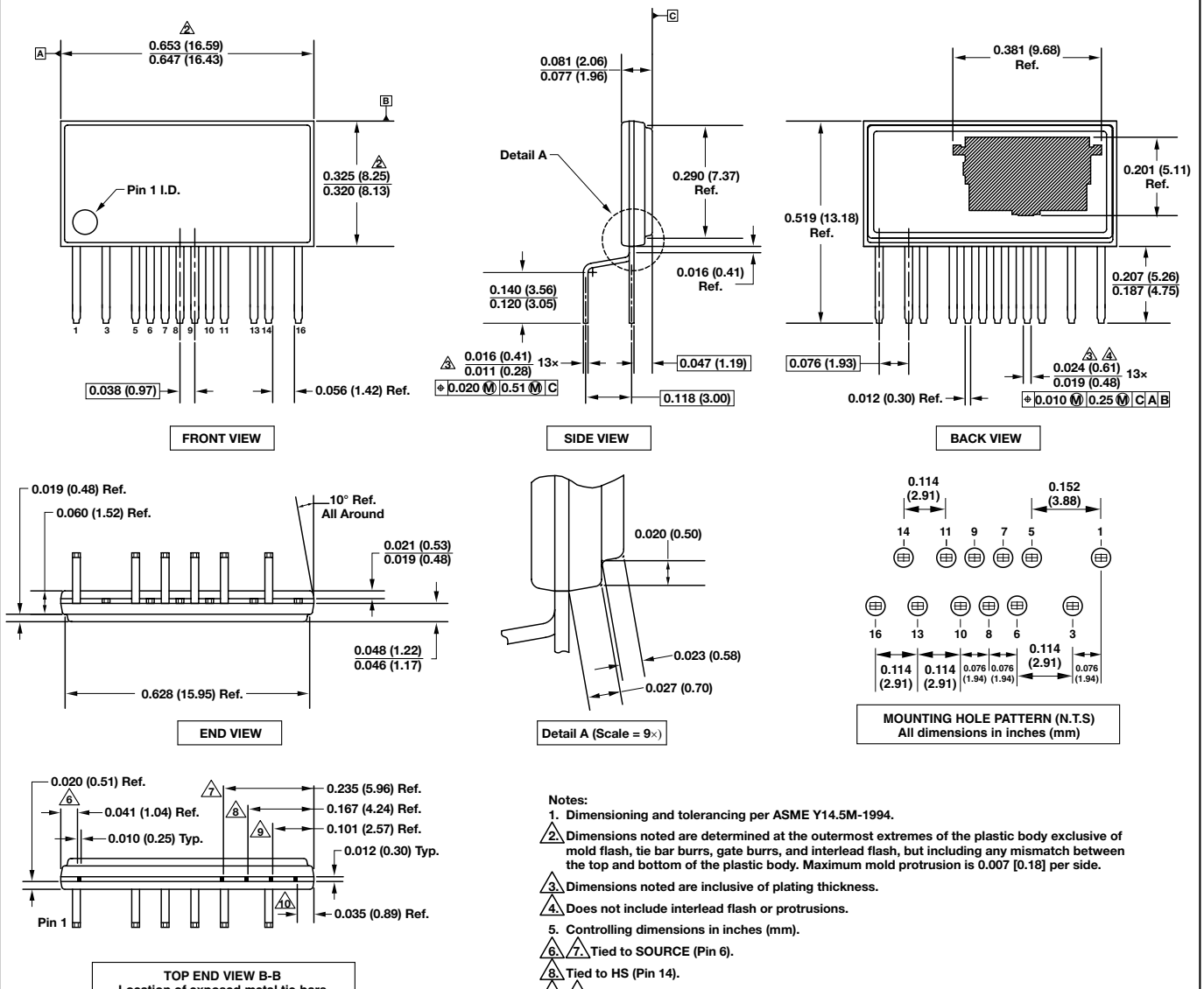

Notes:

1. Dimensioning and tolerancing per ASME Y14.5M-1994.
2. Dimensions noted are determined at the outermost extremes of the plastic body exclusive of mold flash, tie bar burrs, gate burrs, and interlead flash, but including any mismatch between the top and bottom of the plastic body. Maximum mold protrusion is 0.007 [0.18] per side.
3. Dimensions noted are inclusive of plating thickness.
4. Does not include interlead flash or protrusions.
5. Controlling dimensions in inches (mm).
6. 7. Tied to SOURCE (Pin 6).
8. Tied to HS (Pin 14).
9. 10. Tied to HD (Pin 16).

PI-7080-070813

eSIP-16G (L Package)

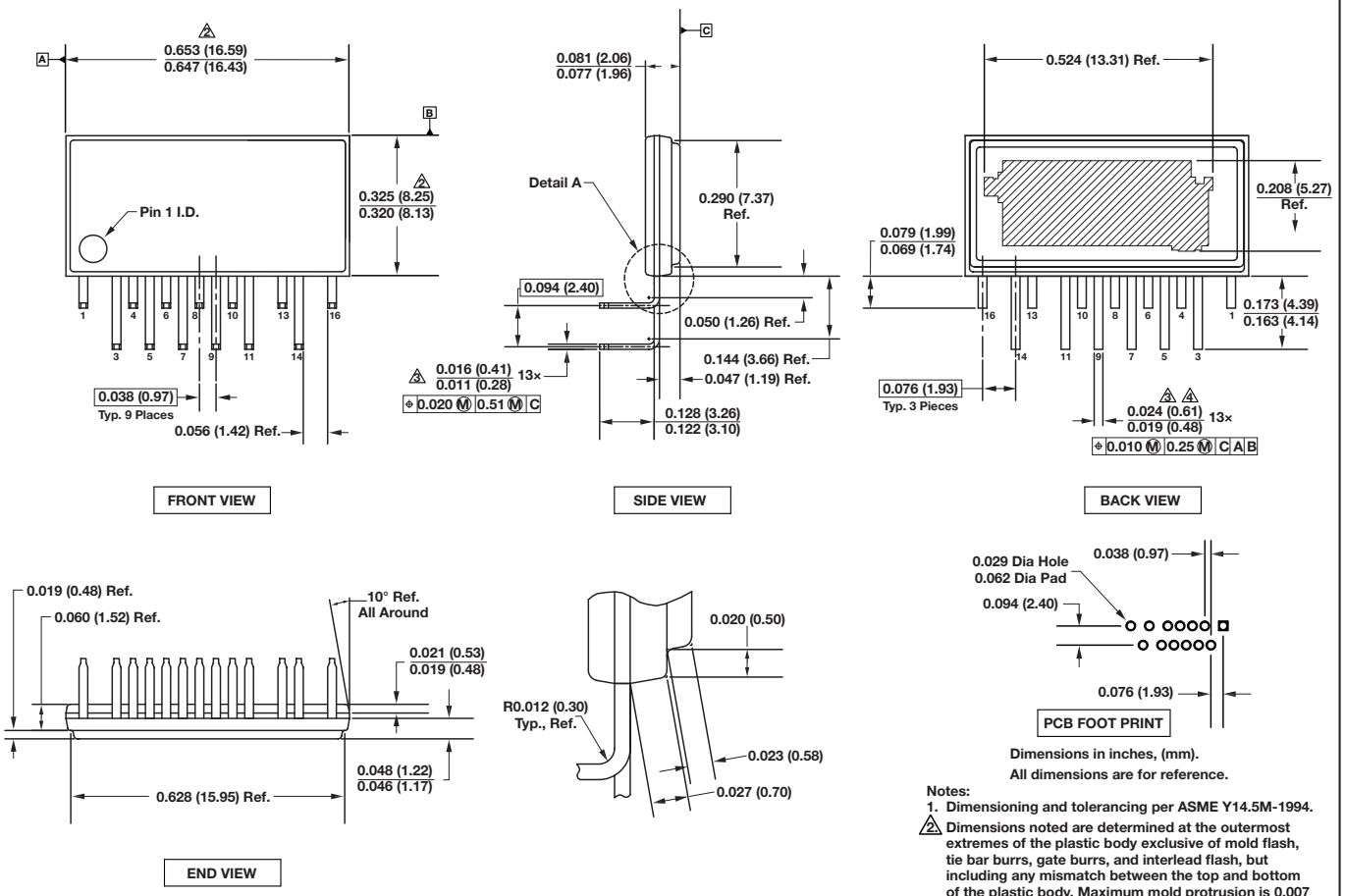

eSIP-16J (H Package)

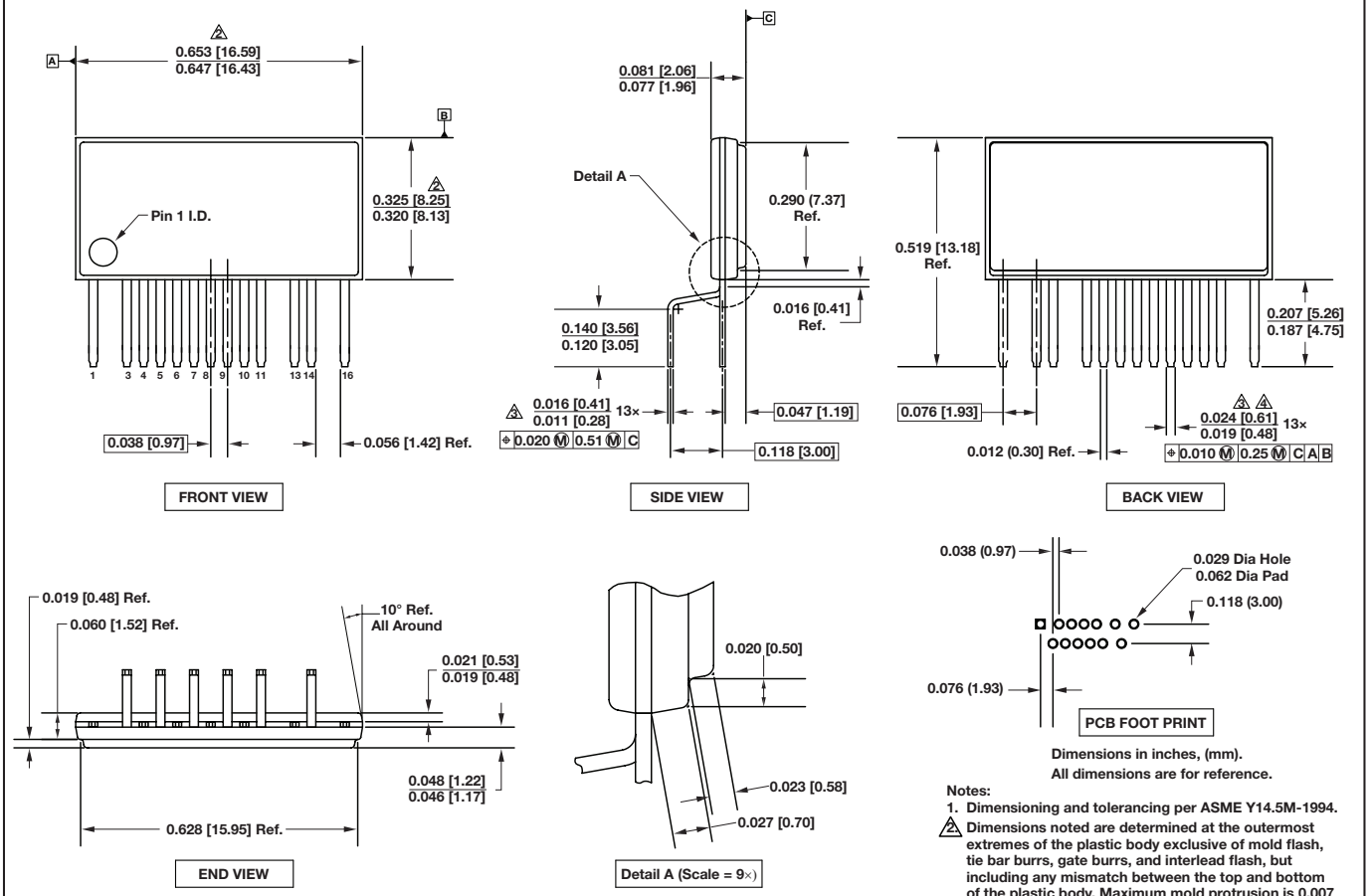

Dimensions in inches, (mm).
All dimensions are for reference.

Notes:

1. Dimensioning and tolerancing per ASME Y14.5M-1994.
2. Dimensions noted are determined at the outermost extremes of the plastic body exclusive of mold flash, tie bar burrs, gate burrs, and interlead flash, but including any mismatch between the top and bottom of the plastic body. Maximum mold protrusion is 0.007 [0.18] per side.
3. Dimensions noted are inclusive of plating thickness.
4. Does not include interlead flash or protrusions.
5. Controlling dimensions in inches [mm].

PI-6632-120211

eSIP-16K (L Package)

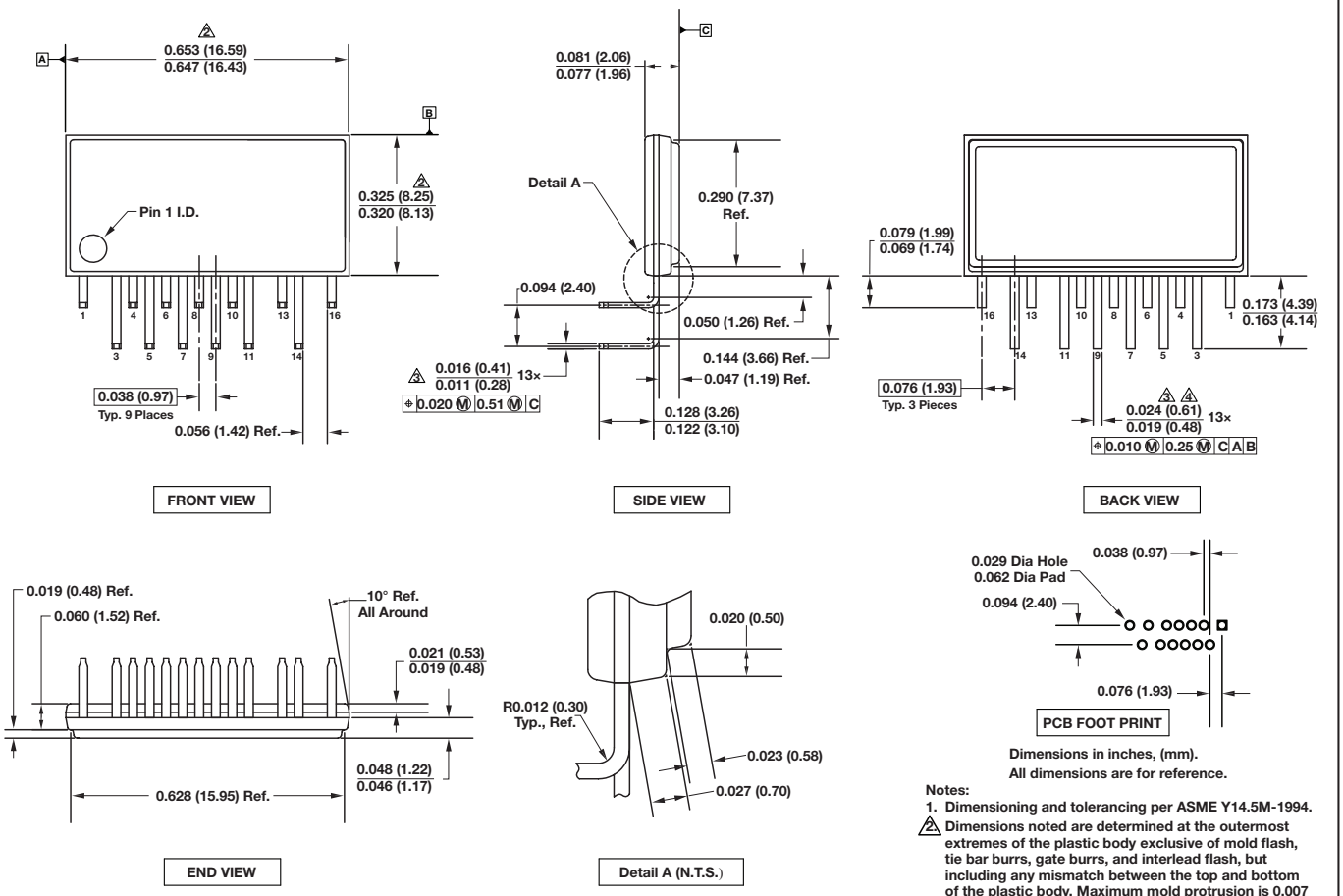

Dimensions in inches, (mm).
All dimensions are for reference.

Notes:

1. Dimensioning and tolerancing per ASME Y14.5M-1994.
2. Dimensions noted are determined at the outermost extremes of the plastic body exclusive of mold flash, tie bar burrs, gate burrs, and interlead flash, but including any mismatch between the top and bottom of the plastic body. Maximum mold protrusion is 0.007 [0.18] per side.
3. Dimensions noted are inclusive of plating thickness.
4. Does not include interlead flash or protrusions.
5. Controlling dimensions in inches (mm).

PI-6454-020212

eSOP-12B (K Package)

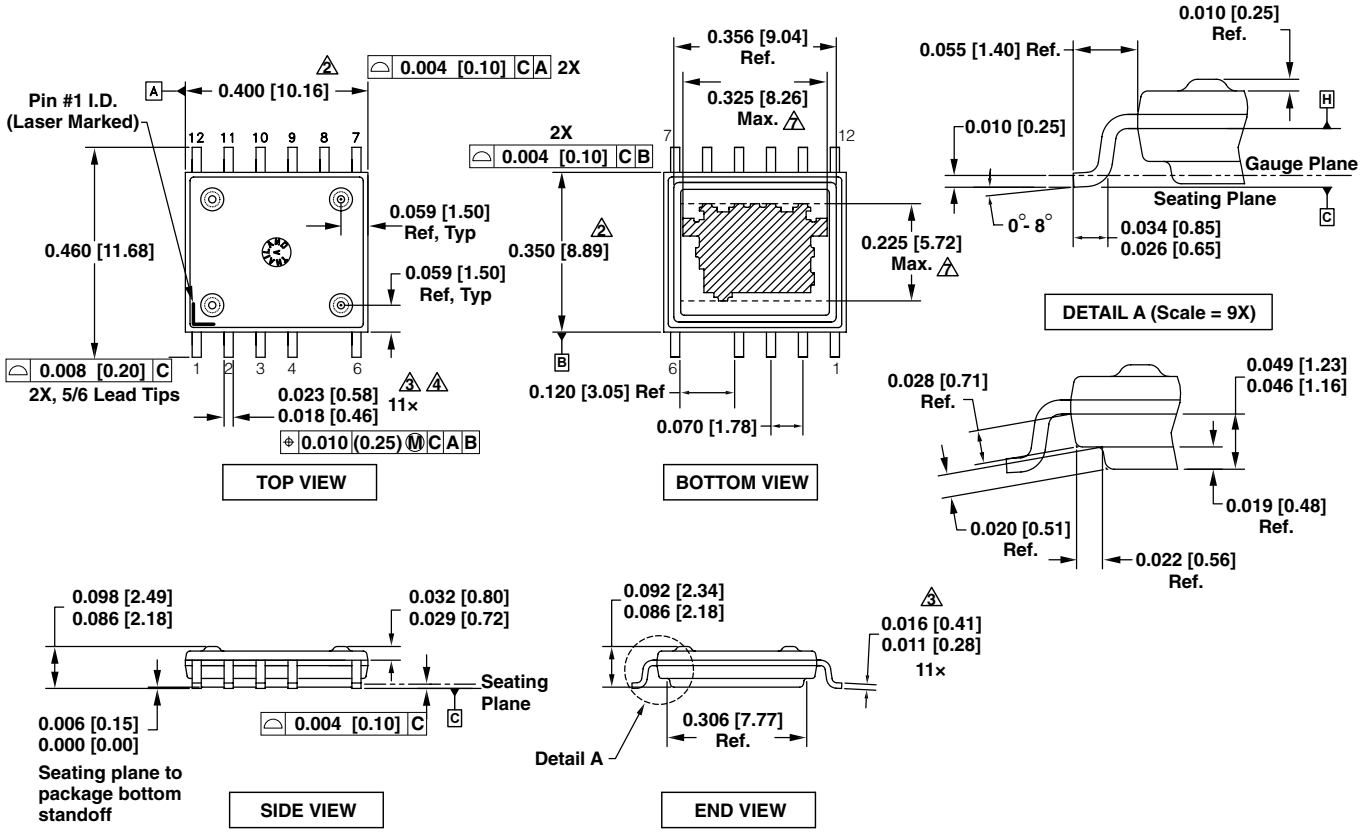

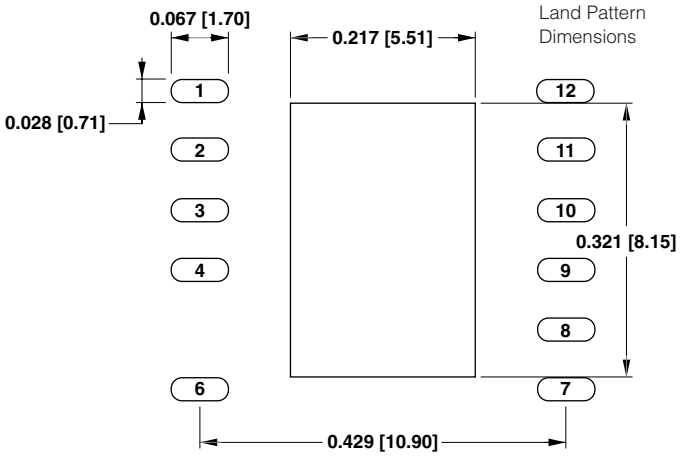

Notes:

1. Dimensioning and tolerancing per ASME Y14.5M-1994.
2. Dimensions noted are determined at the outermost extremes of the plastic body exclusive of mold flash, tie bar burrs, gate burrs, and interlead flash, but including any mismatch between the top and bottom of the plastic body. Maximum mold protrusion is 0.007 [0.18] per side.
3. Dimensions noted are inclusive of plating thickness.
4. Does not include interlead flash or protrusions.
5. Controlling dimensions in inches [mm].
6. Datums A and B to be determined at Datum H.
7. Exposed pad is nominally located at the centerline of Datums A and B. "Max" dimensions noted include both size and positional tolerances.

PI-5748a-100311

Tape and Reel Ordering Information

Power Integrations makes selected surface-mount parts available in tape and reel form for use with automatic pick-and-place equipment. Tape and reel specifications meet or exceed industry standard specification EIA-481.

Ordering Information

Parts available in tape and reel form can be ordered by placing a tape and reel ordering suffix after the base part number. The ordering suffix is TL.

Base Part #	Tape and Reel Suffix
TNY264G	-TL

Please contact the factory for other options. Minimum order size is 1 reel per line item, and all orders will be in multiples of full reel quantities. The quantity per reel for each package type is shown in Table 1. Power Integrations normal terms and conditions apply.

Electrical Specifications

Parts are subjected to the Power Integrations standard test flow, after which the parts are loaded into the tape cavities and sealed with a cover tape using standard anti-static handling procedures. The tape and cover are constructed of conductive modified polystyrene, providing a surface resistivity of $\leq 10^6$ Ω/square. The reel is made of polystyrene with a topical anti-static coating, providing a surface resistivity of $\leq 10^{11}$ Ω/square.

Package	Tape		Reel DIA	Reel QTY
	Width (W)	Pitch (P)		
SMD-8	16 mm	12 mm	330 mm	1000
TO-263	24 mm	16 mm	330 mm	750
SO-8C	12 mm	8 mm	330 mm	2500
eSOP-12B	24 mm	16 mm	330 mm	1000

Table 1. Primary Tape & Reel Dimensions and Reel Quantities.

Physical Specifications

Physical specifications of the tape, cover, and reel are governed by EIA-481. Physical dimensions of the tapes are given in Figure 2 and Table 2, and physical dimensions of the reels are given in Figure 3 and Table 3.

Packaging for Shipment

Power Integrations supplies the following information on the side of each reel for ease of product identification:

- Power Integrations part number (MPN), including orientation suffix
- Encapsulation date code (D/C)
- Assembly lot identification (LOT)
- Quantity (QTY)
- Tape and reel packing date code (R/D)

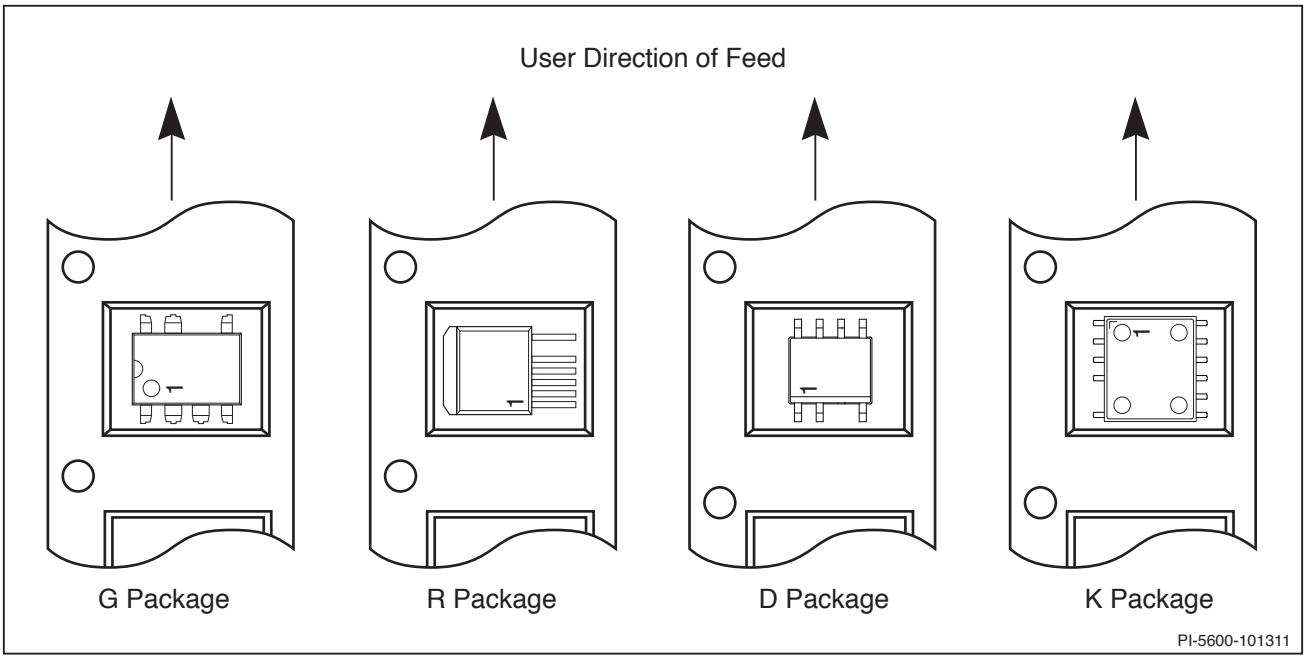

Figure 1. Part Orientation.

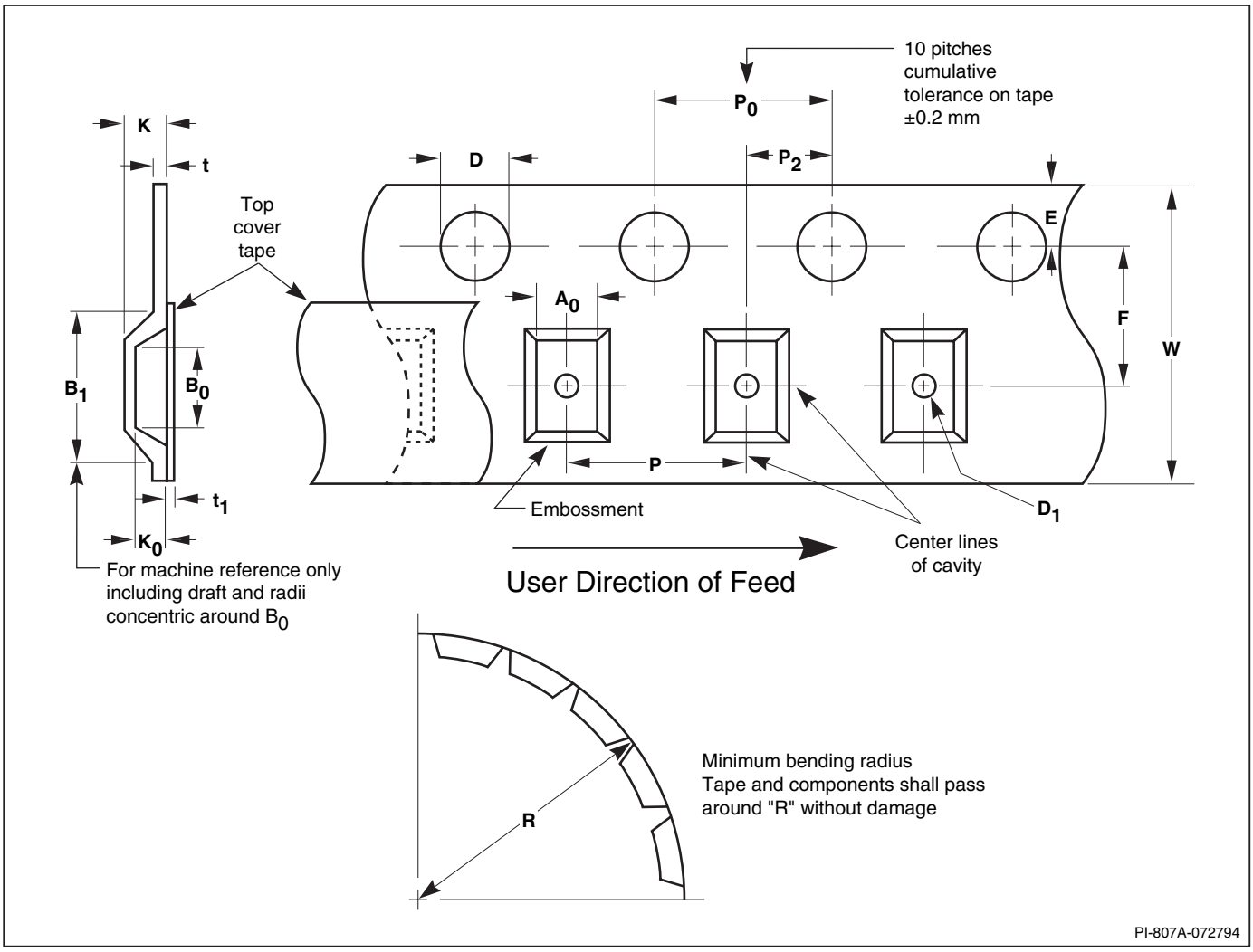

Figure 2. Tape Dimension Index.

Package Type	Tape Size	A_0	B_0	B_1	D	D_1	E	F	K
SMD-8	16 mm	10.1 - 10.3	10.0 - 10.2	12.1 (max)	1.5 - 1.6	1.5 (min)	1.65 - 1.85	7.40 - 7.60	6.5 (max)
TO-263	24 mm	10.9 - 11.1	16.2 - 16.4	16.9 (max)	1.5 - 1.6	1.5 (min)	1.65 - 1.85	11.40 - 11.60	5.9 (max)
SO-8C	12 mm	6.5 - 6.7	5.2 - 5.4	5.8 (max)	1.5 - 1.6	1.5 (min)	1.65 - 1.85	5.45 - 5.55	2.2 (max)
eSOP-12B	24 mm	10.27 - 10.77	11.89 - 12.39	13.25 (max)	1.5 - 1.6	1.4 (min)	1.65 - 1.85	11.40 - 11.60	3.22 (max)

Package Type	Tape Size	K_0	P	P_0	P_2	R	t	t_1	W
SMD-8	16 mm	3.60 - 3.80	11.9 - 12.1	3.9 - 4.1	1.90 - 2.10	40 (min)	0.400 (max)	0.10 (max)	15.7 - 16.3
TO-263	24 mm	5.40 - 5.60	15.9 - 16.1	3.9 - 4.1	1.90 - 2.10	50 (min)	0.350 (max)	0.07 (max)	23.7 - 24.3
SO-8C	12 mm	1.60 - 1.80	7.90 - 8.10	3.8 - 4.2	1.95 - 2.05	50 (min)	0.35 (max)	0.5 (typ)	11.7 - 12.3
eSOP-12B	24 mm	2.72 - 3.22	15.9 - 16.1	3.9 - 4.1	1.90 - 2.10	Complies EIA-481 Standard	0.385 (max)	0.7 (max)	23.7 - 24.3

Table 2. Tape Dimensions (in mm).

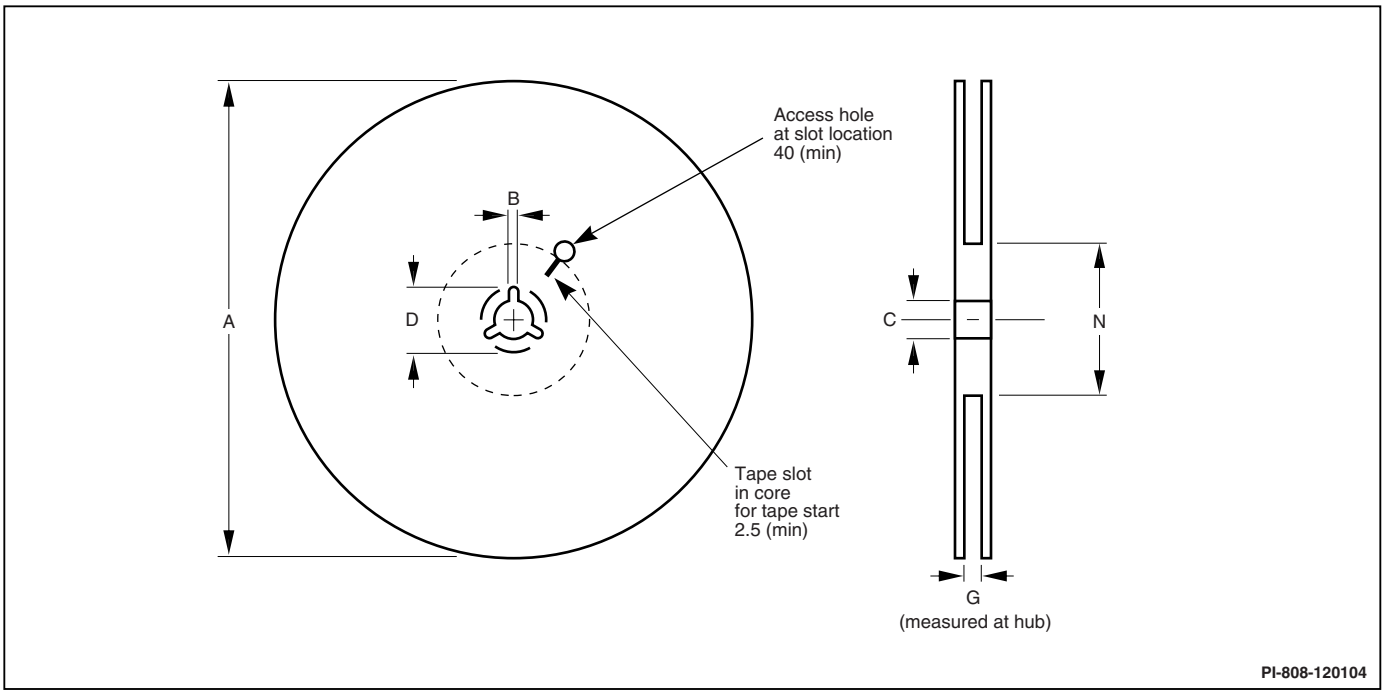

Figure 3. Reel Dimension Index.

Package Type	Tape Size	A	B	C	D	G	N
SMD-8	16 mm	330 (max)	1.5 (min)	12.80 - 13.50	20.2 (min)	16	102 (ref)
TO-263	24 mm	330 (max)	1.5 (min)	12.80 - 13.50	20.2 (min)	24	102 (ref)
SO-8C	12 mm	330 (max)	1.5 (min)	12.80 - 13.50	20.2 (min)	12	102 (ref)
eSOP-12B	24 mm	332 (max)	1.5 (min)	12.80 - 13.50	20.2 (min)	24.4 - 25.4	102 (ref)

Table 3. Reel Dimensions (in mm).

Pb-Free and RoHS Compliant Products

Power Integrations is committed to environmental, health and safety excellence and is actively complying with regulatory requirements regarding the removal of hazardous materials in manufacturing standards and processes. In response to concerns regarding the environmental impact of lead (Pb), a Pb-free solder finish is now available using 100% matte tin (Sn).

Pb-free packages offered by Power Integrations meet the requirements of the European law on the Restriction of Hazardous Substances (RoHS), which mandates the removal of lead and other hazardous substances cited in the directive. All Pb-free and RoHS compliant products have passed qualification testing for moisture sensitivity, solderability, and whisker growth. Pb-free and RoHS compliant surface mount products also comply with the joint IPC/JEDEC industry standard on reflow solderability (J-STD-020C). More information on soldering is included below.

RoHS compliant and Pb-free products are designated by an N-suffix at the end of the part number (see the Part Ordering Information section of the product family data sheets).

Green Products

Power Integrations considers GREEN a product RoHS compliant, Pb-Free and Halogen-Free. These products are designed by G-suffix at the end of the part number.

Substance	Upper Limits
Bromine	<900 ppm
Chlorine	<900 ppm
Total Halogen	<1500 ppm
Antimony Troxide	<1000 ppm

Table 4. Halogen Free Substance Limits.

Solder Temperature Profiles

TYPICAL FULL IMMERSION WAVE SOLDER PROFILE FOR Pb-FREE SO-8C and eSOP-12B PACKAGES

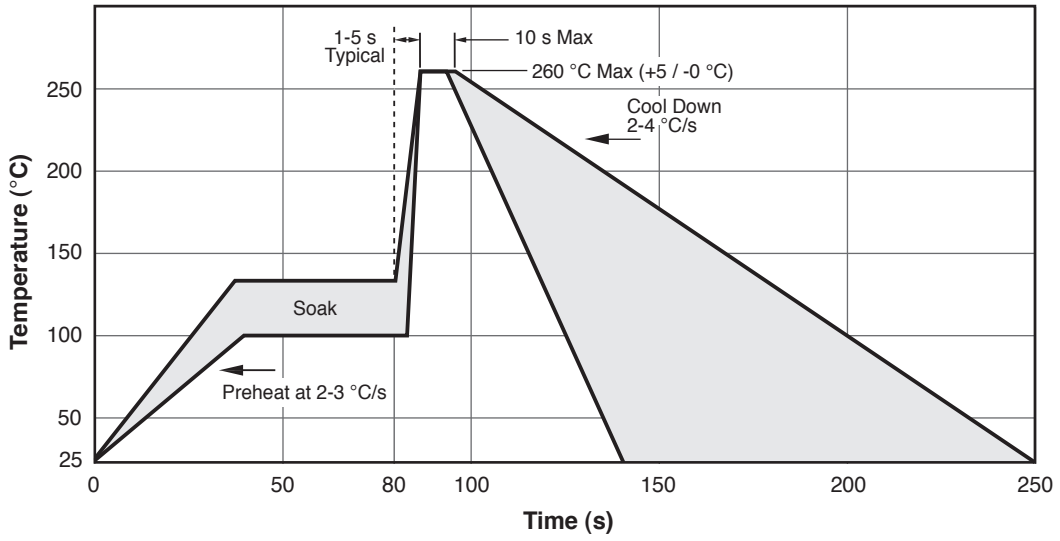

PI-5599-022412

TYPICAL WAVE SOLDER PROFILE FOR Pb-FREE THROUGH-HOLE PACKAGES

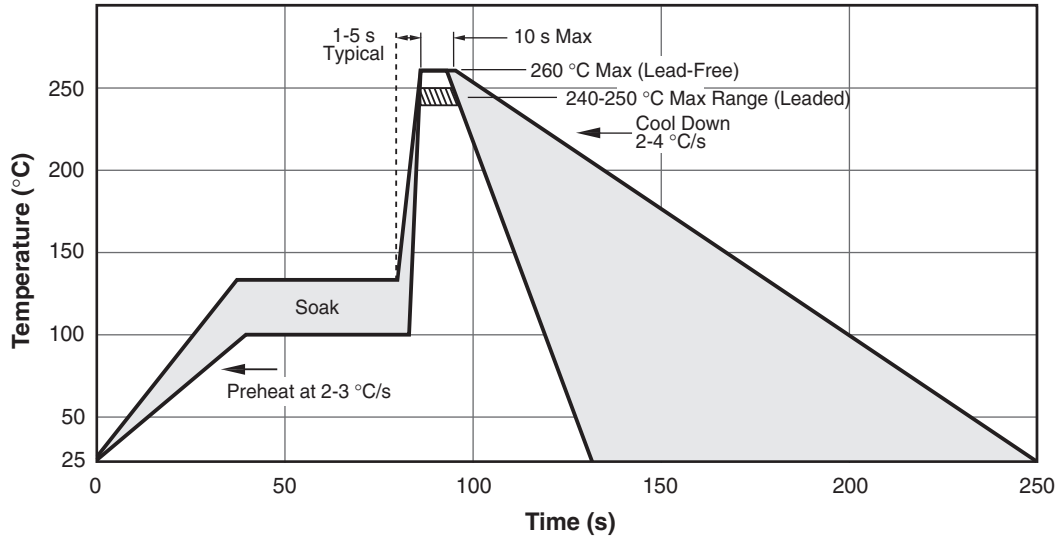

PI-3852-051010

Note 1: Pb-free packages are qualified for Sn-Pb assembly. Sn-Pb packages are not qualified for Pb-free assembly.

TYPICAL IR REFLOW PROFILE FOR Sn-Pb AND Pb-FREE SURFACE MOUNT PACKAGES

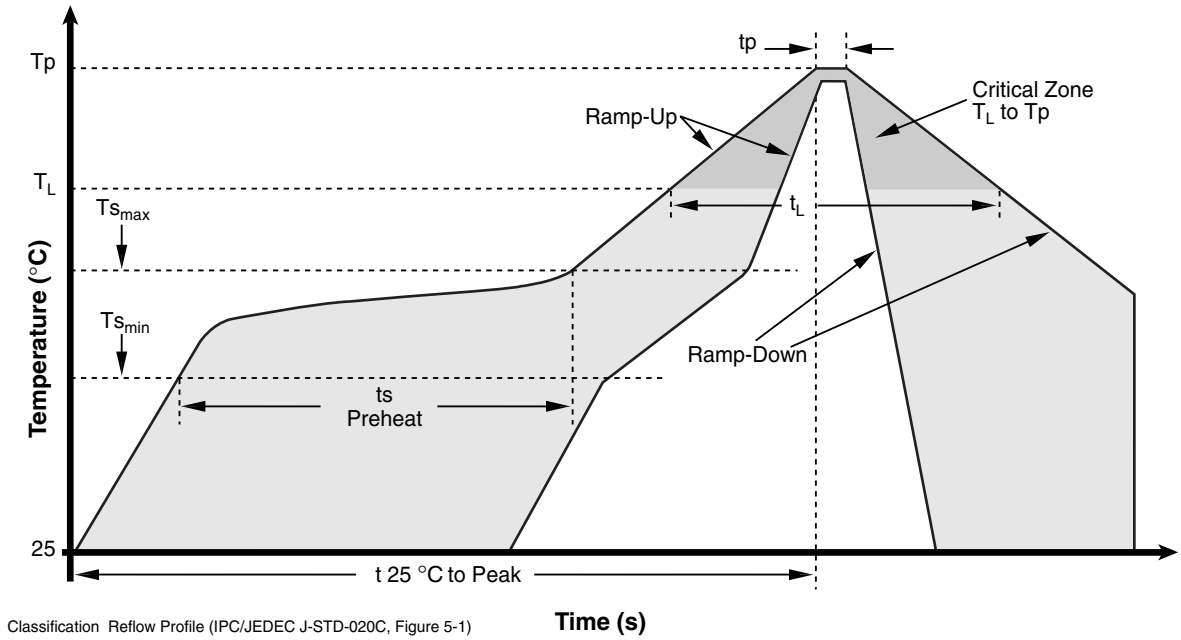

Classification Reflow Profile (IPC/JEDEC J-STD-020C, Figure 5-1)
Reproduced with permission by IPC and JEDEC, 2005

PI-3955-042706

Note 1: Pb-free packages are qualified for Sn-Pb assembly. Sn-Pb packages are not qualified for Pb-free assembly.

Profile Feature	Sn-Pb Eutectic Assembly	Pb-Free Assembly
Average Ramp-Up Rate (Ts_{max} to Tp)	3 °C/second max.	3 °C/second max.
Preheat ± Temperature Min (Ts_{min}) ± Temperature Max (Ts_{max}) ± Time (ts_{min} to ts_{max})	100 °C 150 °C 60-120 seconds	150 °C 200 °C 60-180 seconds
Time maintained above: ± Temperature (T_L) ± Time (t_L) Peak/Classification Temperature (Tp)	183 °C 60-150 seconds See Table 6	217 °C 60-150 seconds See Table 6
Time within 5 °C of actual Peak Temperature (tp)	10-30 seconds	20-40 seconds
Ramp-Down Rate	6 °C/second max.	6 °C/second max.
Time 25 °C to Peak Temperature	6 minutes max.	8 minutes max.

Table 5. Classification Reflow Profiles (per IPC/JEDEC J-STD-020, Table 5.2)

Note 1: All temperatures refer to topside of the package, measured on the package body surface.

Package Type	Sn-Pb Eutectic Assembly	Pb-Free Assembly
SMD-8	225 + 0/-5 °C	250 + 0 °C*
TO-263	225 + 0/-5 °C	Not Available
SO-8C	225 + 0/-5 °C	260 + 0/-5 °C
eSOP-12B	225 + 0/-5 °C	260 + 0/-5 °C

*Tolerance: Process compatibility is up to and including the stated classification temperature (this means Peak reflow temperature + 0 °C. For example, 250 + 0 °C) at the rated MSL level.

Table 6. Peak/Classification Temperature (Tp) for PI Surface Mount Packages.

Note 1: Classification temperatures are in accordance with guidelines set forth in IPC/JEDEC J-STD-020C.

Soldering Guidelines

1. Profiles shown are typical and will therefore vary with different soldering systems.
2. Density and types of components on the board, size and type of board, solder and flux being used, substrate material being used, equipment type/model and age are factors that can influence the profile.
3. Since the melting temperature of solder is higher than the rated temperature of the device, care should be taken that the device will get as little exposure as possible at the high temperature. Not doing so increases possibility of a device failure.
4. Limit high temperature exposure only to single side or one time and mostly to the leads area only.
5. Upon completion of soldering, gradual natural cooling should be observed for a minimum of three minutes. Using forced cooling will increase temperature gradient which increases mechanical stress leading to latent failure.

PC Board Cleaning

Power Integrations does not recommend the use of "no-clean" flux.

Mounting Guidelines for TO-220 Package

Maximum Torque:

The screw torque specification for the TO-220 packages used for Power Integrations products is 4 lbf × in or 0.45 N × m (4.6 kgf × cm) maximum.

Mounting Guidelines:

The recommended fastener is a 6-32 screw using a rectangular washer to prevent damage to the tab. If a rectangular washer is not used, a round flat washer is required. The head of a machine screw is not flat enough to prevent damage. Without a washer, damage to the plastic case and semiconductor chip within may occur.

A smaller screw or larger heat sink hole can cause the tab to be deformed, cracking the package. Care must also be taken to prevent contact between the plastic package and the screw head or tool used to tighten it. Self-tapping screws may deform the heat sink causing poor thermal contact. Rivets should not be used under any circumstances for TO-220 packages.

The mounting surface must be flat and without burrs. Otherwise, the TO-220 tab may be bent, causing damage to the IC chip.

Finally, the IC should be mounted to the heat sink before soldering the assembly to the PCB. Soldering the IC and heat sink to the PCB and then screwing them together will put unacceptable mechanical stress on the IC package.

Revision	Notes	Date
V	Updated wave solder profiles	12/09
W	Page 17, per PCN 09081	12/09
X	Added eDIP-12 package	03/10
Y	Added SO-8 package, removed MSL information	04/10
Z	Updated Note 2 on eSIP-7C, eSIP-7F, eDIP-12 and SO-8C	06/10
AA	Added eSOP-12 package	10/10
AB	Added eSIP-7G and eSIP-16B packages	11/10
AC	Updated eSIP-16B package	03/11
AD	Updated Table 6 with eSOP-12 package type	03/11
AE	Added eSIP-16C package	05/11
AF	Added eDIP-12B and eSOP-12B packages. Removed eDIP-12 and eSOP-12 packages.	10/11
AG	Added eSIP-16K L package and eSOP-12B to PI-5599.	02/12
AH	Added eSIP-16J H package.	09/12
AI	Corrected SMD-8 value in column “W” for Table 2.	02/13
AJ	Added eSIP-16D H Package, eSIP-16G L Package, eSIP-16F H Package.	06/13
AK	Updated eSIP-16F H Package.	09/13
AL	Added package identifier table.	11/13

For the latest updates, visit our website: www.powerint.com

Power Integrations reserves the right to make changes to its products at any time to improve reliability or manufacturability. Power Integrations does not assume any liability arising from the use of any device or circuit described herein. POWER INTEGRATIONS MAKES NO WARRANTY HEREIN AND SPECIFICALLY DISCLAIMS ALL WARRANTIES INCLUDING, WITHOUT LIMITATION, THE IMPLIED WARRANTIES OF MERCHANTABILITY, FITNESS FOR A PARTICULAR PURPOSE, AND NON-INFRINGEMENT OF THIRD PARTY RIGHTS.

Patent Information

The products and applications illustrated herein (including transformer construction and circuits external to the products) may be covered by one or more U.S. and foreign patents, or potentially by pending U.S. and foreign patent applications assigned to Power Integrations. A complete list of Power Integrations patents may be found at www.powerint.com. Power Integrations grants its customers a license under certain patent rights as set forth at http://www.powerint.com/ip.htm.

Life Support Policy

POWER INTEGRATIONS PRODUCTS ARE NOT AUTHORIZED FOR USE AS CRITICAL COMPONENTS IN LIFE SUPPORT DEVICES OR SYSTEMS WITHOUT THE EXPRESS WRITTEN APPROVAL OF THE PRESIDENT OF POWER INTEGRATIONS. As used herein:

1. A Life support device or system is one which, (i) is intended for surgical implant into the body, or (ii) supports or sustains life, and (iii) whose failure to perform, when properly used in accordance with instructions for use, can be reasonably expected to result in significant injury or death to the user.
2. A critical component is any component of a life support device or system whose failure to perform can be reasonably expected to cause the failure of the life support device or system, or to affect its safety or effectiveness.

The PI logo, TOPSwitch, TinySwitch, LinkSwitch, LYTSwitch, DPA-Switch, PeakSwitch, CAPZero, SENZero, LinkZero, HiperPFS, HiperTFS, HiperLCS, Qspeed, EcoSmart, Clampless, E-Shield, Filterfuse, StakFET, PI Expert and PI FACTS are trademarks of Power Integrations, Inc. Other trademarks are property of their respective companies. ©2013, Power Integrations, Inc.

Power Integrations Worldwide Sales Support Locations

World Headquarters
5245 Hellyer Avenue
San Jose, CA 95138, USA.
Main: +1-408-414-9200
Customer Service:
Phone: +1-408-414-9665
Fax: +1-408-414-9765
e-mail: usasales@powerint.com

China (Shanghai)
Rm 2410, Charity Plaza, No. 88
North Caoxi Road
Shanghai, PRC 200030
Phone: +86-21-6354-6323
Fax: +86-21-6354-6325
e-mail: chinasales@powerint.com

China (ShenZhen)
3rd Floor, Block A,
Zhongtou International Business
Center, No. 1061, Xiang Mei Rd,
FuTian District, ShenZhen,
China, 518040
Phone: +86-755-8379-3243
Fax: +86-755-8379-5828
e-mail: chinasales@powerint.com

Germany
Lindwurmstrasse 114
80337 Munich
Germany
Phone: +49-895-527-39110
Fax: +49-895-527-39200
e-mail: eurosales@powerint.com

India
#1, 14th Main Road
Vasanthanagar
Bangalore-560052 India
Phone: +91-80-4113-8020
Fax: +91-80-4113-8023
e-mail: indiasales@powerint.com

Italy
Via Milanese 20, 3rd. Fl.
20099 Sesto San Giovanni (MI)
Italy
Phone: +39-024-550-8701
Fax: +39-028-928-6009
e-mail: eurosales@powerint.com

Japan
Kosei Dai-3 Bldg.
2-12-11, Shin-Yokohama,
Kohoku-ku
Yokohama-shi Kanagwan
222-0033 Japan
Phone: +81-45-471-1021
Fax: +81-45-471-3717
e-mail: japansales@powerint.com

Korea
RM 602, 6FL
Korea City Air Terminal B/D, 159-6
Samsung-Dong, Kangnam-Gu,
Seoul, 135-728, Korea
Phone: +82-2-2016-6610
Fax: +82-2-2016-6630
e-mail: koreasales@powerint.com

Singapore
51 Newton Road
#19-01/05 Goldhill Plaza
Singapore, 308900
Phone: +65-6358-2160
Fax: +65-6358-2015
e-mail: singaporesales@powerint.com

Taiwan
5F, No. 318, Nei Hu Rd., Sec. 1
Nei Hu Dist.
Taipei 11493, Taiwan R.O.C.
Phone: +886-2-2659-4570
Fax: +886-2-2659-4550
e-mail: taiwansales@powerint.com

Europe HQ
1st Floor, St. James's House
East Street, Farnham
Surrey GU9 7TJ
United Kingdom
Phone: +44 (0) 1252-730-141
Fax: +44 (0) 1252-727-689
e-mail: eurosales@powerint.com

Applications Hotline
World Wide +1-408-414-9660

Applications Fax
World Wide +1-408-414-9760